Nanomaterials biotransformation: In planta mechanisms of action.

Environmental Pollution

Nanomaterials biotransformation: In planta mechanisms of action

--Manuscript Draft--

Manuscript Number:	ENVPOL-D-22-05734R1
Article Type:	VSI:Pollutants and plants
Section/Category:	Special Issues
Keywords:	biotransformation; plant; Nanomaterials; synchrotron-based analyses; molecular response
Corresponding Author:	Marta Marmiroli University of Parma Parma, Parma ITALY
First Author:	Luca Pagano
Order of Authors:	Luca Pagano
	Riccardo Rossi
	Jason C. White
	Nelson Marmiroli
	Marta Marmiroli
Abstract:	Research on engineered nanomaterials (ENMs) exposure has continued to expand rapidly, with a focus on uncovering the underlying mechanisms. The EU largely limits the number and the type of organisms that can be used for experimental testing through the 3R normative. There are different routes through which ENMs can enter the soil-plant system: this includes the agricultural application of sewage sludges, and the distribution of nano-enabled agrochemicals. However, a thorough understanding of the physiological and molecular implications of ENMs dispersion and chronic low-dose exposure remains elusive, thus requiring new evidence and a more mechanistic overview of pathways and major effectors involved in plants. Plants can offer a reliable alternative to conventional model systems to elucidate the concept of ENM biotransformation within tissues and organs, as a crucial step in understanding the mechanisms of ENM-organism interaction. To facilitate the understanding of the physico-chemical forms involved in plant response, synchrotron-based techniques have added new potential perspectives in studying the interactions between ENMs and biota. These techniques are providing new insights on the interactions between ENMs and biomolecules. The present review discusses the principal outcomes for ENMs after intake by plants, including possible routes of biotransformation which make their final fate less uncertain, and therefore require further investigation.
Suggested Reviewers:	Nubia Zuverza-Mena Nubia.Zuverza@ct.gov expert in the field
	Luca Marchiol luca.marchiol@uniud.it Expert in the field
	Sanghamitra Majumdar majumdarsm@gmail.com Expert in the field
	Tomas Vanek vanek@ueb.cas.cz Expert in the field
	Alan Baker a.baker4@uq.edu.au Expert in the field
	Alessandra Gianoncelli

	alessandra.gianoncelli@elettra.eu Expert in the field
Response to Reviewers:	Please see the attached file for complete Revisions. Editor and Reviewer comments: Reviewer #1: Manuscript review of ENVPOL-D-22-05734 "Nanomaterials biotransformation: In planta mechanisms of action" This review article summarized recent works on the nanomaterial biotransformation within plant tissues using synchrotron-based techniques. The impacts of engineered nanomaterials (ENMs) on plant gene expression were also included. Specifically, studies regarding the biointeraction between plants and ENMs (nanoscale CeO2, La2O3, TiO2, Au, FeOx, ZVI, ZnO, CuO, and CdS QDs) were listed and discussed in detail. This review paper contributes to the deep understanding of the fate of ENMs in plant tissues, and the related genetic regulation of plants induced by ENM exposures. The contents are within the scope of the Environmental Pollution. However, I have a number of general concerns, followed by a range of specific comments, which prevent me from recommending this paper for publication in its current form. General Comments- Some parts of the abstract and introduction are not quite relevant to the main topic, and need to be revised. The main topic, synchrotron-based analysis of ENMs biotransformation, should be more emphasized and discussed in more detail. In part 1, there was only one sub-title 1.1. None of the figures or the tables provided any information related to the in planta biotransformation. Several figures with summarized information instead of only one figure are better for a review article. Some references are too old or not representative. They should be up to date. We thank Rev1 for the constructive comments and suggestions given. The manuscript has been thoroughly improved in order to answer to all comments reported. Paragraph subdivision has been updated. Several new references and an additional Figure have been included. All the edited sections have been reported in the answer to each specific question. Specific Comments- The abstract used a large amount of space describing exposure pathways and low-dose effects. However, they were not well discussed in the main text. Similarly, the "potential applicability" was not given in the main text. The abstract should contain the most significant findings, critical comments on the current studies, or perspectives for future research. The abstract has been modified in order to be more informative on the points discussed in the main text. The abstract now reads as follows: “Research on engineered nanomaterials (ENMs) exposure has continued to expand rapidly, with a focus on uncovering the underlying mechanisms. The EU largely limits the number and the type of organisms that can be used for experimental testing through the 3R normative. There are different routes through which ENMs can enter the soil-plant system: this includes the agricultural application of sewage sludges, and the distribution of nano-enabled agrochemicals. However, a thorough understanding of the physiological and molecular implications of ENMs dispersion and chronic low-dose exposure remains elusive, thus requiring new evidence and a more mechanistic overview of pathways and major effectors involved in plants. Plants can offer a reliable alternative to conventional model systems to elucidate the concept of ENM biotransformation within tissues and organs, as a crucial step in understanding the mechanisms of ENM-organism interaction. To facilitate the understanding of the physico-chemical forms involved in plant response, synchrotron-based techniques have added new potential perspectives in studying the interactions between ENMs and biota. These techniques are providing new insights on the interactions between ENMs and biomolecules. The present review discusses the principal outcomes for ENMs after intake by plants, including possible routes of biotransformation which make their final

fate less uncertain, and therefore require further investigation."

The Paragraph 3 has been also modified to give a more timely reference to potential applicability:

Lines 558-567: "This information is highly relevant with regard to potential applicability: ENMs can interact with sensitive ecosystem components within trophic food chains, affect microbial populations in soil, enter into the plant and where they can be translocated to different tissues and organs, including the edible tissues or organs (Holden et al., 2013; Liu et al., 2015). Biotransformation can occur at each step within these processes, modifying and/or amplifying ENM effects at organism level. These interactions from the level of ecosystem, organism, tissue, cell, and organelles become key factors when applying "ENM biotransformation" as a concept for a safer design, when considering applications for agriculture and food production, and for minimizing the adverse biological impact (Burello & Worth, 2015; Pagano et al., 2018; Lowry et al., 2019; Kah et al., 2019; Zulfiqar et al., 2019; Ma et al., 2020; Hameed et al., 2022; Xu et al., 2022)."

A new reference has been also included:

Xu T., Wang Y., Aytac Z., Zuverza-Mena N., Zhao Z., Hu X., Ng K.W., White J.C., Demokritou P.
Enhancing Agrichemical Delivery and Plant Development with Biopolymer-Based Stimuli Responsive Core–Shell Nanostructures. ACS Nano 2022, 16, 4, 6034–6048.

You mentioned that three billion tons of crops are produced per year and cost a lot of source and energy in L41-47. What is the purpose? Please consider deleting them.

The new paragraph 1.1 entitled "from ENM exposure to biotransformation" has been reduced and thoroughly edited in order to be more focused on the main topic of the review:

Lines 47-99: "Although global food production has generally increased over time, the distribution has been far from equitable, with more than 820 million people having insufficient food and many more consuming low-quality diets leading directly to micronutrient deficiencies (Willett et al 2019; Zhong et al., 2020). In the past 20 years, and particularly in the past decade, engineered nanomaterials (ENMs) have seen dramatically increasing use and had an equally significant impact on ecosystems services and human society. As such, studies focused on the implications associated with their use are critical. In fact, it is known that ENMs exert important, but not completely understood, effects on biota; a particular topic of concern include the effect on crops, food production, and trophic transfer (Gardea-Torresdey et al., 2014; Ma et al., 2018; White et al., 2022).
The interplay between plant growth, dissolution, evaporation, and aggregation are key aspects of the dynamic behavior of ENMs in the environment. Directional aggregation can result in the formation of larger particles with a more complex morphology. However, given the complexity of natural environments, most nanomaterials can be found in hetero-aggregated composites of different inorganic and organic materials (Judy et al., 2012; Ma et al 2018). These aggregates can be very different from original simple pristine morphologies and may even form highly branched structures similar to fractals, all of which subsequently dramatically affect their reactivity and transport (Ma et al., 2018; Huangfu et al., 2019).
Sectors with a large nanomaterial application such as medicine and food production may experience greater risks of ENMs exposure due to their uses, with thousands of tons of ENMs that are eventually discarded into the three main environmental matrices: soil, water, and air (Keller et al., 2013; Zuverza Mena et al., 2017). ENMs with the greatest historical use include nanoscale ceria (nCeO2), silica (nSiO2), titania (nTiO2), as well as nanoscale copper oxide (nCuO), zinc oxide (nZnO) and nanosilver (nAg), and as such, release in the environment has been investigated (Keller & Lazareva, 2014; Mitrano et al., 2015). Considering the long-time span of use of select materials (1950 to 2050), efforts to estimate ENMs release through commercial and associated activity into the environment have been undertaken. For example, for nSiO2, a global production between 100,000 and three million tons per year has been estimated, while

for nCeO2, levels likely reach the upper limit of 10,000 tons per year, and for nAg, the literature reflects a production volume below 1,000 tons per year (Giese et al., 2018). The use of nTiO2 for the inhibition of microbial proliferation in food is one of the most important ways to prolong the shelf life of packaged products (Abutalib & Rajeh., 2020). However, a panel from EFSA concluded that E171 (TiO2) can no longer be considered as safe when used as a food additive (EFSA Journal 2021).
Gottschalk et al., (2009) calculated environmental concentrations using a probabilistic LCA (life cycle analysis) of ENM containing products. The authors modelled nTiO2, nZnO, nAg, carbon nanotubes (CNT), and fullerenes for the U.S., Europe, and Switzerland. The concentrations in the environment were calculated through probabilistic density functions and compared to ecotoxicology data. In the simulations, the values ranged from 0.003 ng L-1 (fullerenes) to 21 ng L-1 (nTiO2) for surface waters and from 4 ng L-1 for fullerenes to 4 µg L-1 for nTiO2 for sewage treatment effluents. In Europe and the U.S., ENMs increased annually in sludge treated soil, and ranged from 1 ng kg-1 for fullerenes to 89 µg kg-1 for nTiO2 (Gottschalk et al. 2009; Keller et al., 2013; Keller & Lazareva, 2014; Rincon, 2019).
Importantly, quantum dots (QDs), as well as many carbon- and metal-based ENMs, have been shown to produce negative effects on animals and plants as a function of dose, including accumulation, alteration of physiological and biochemical parameters, and reduced growth or yield (Oh et al., 2016; Zuverza-Mena et al., 2017). Quantum dots have shown to enter plant roots and to damage the cell wall, dysregulating metabolism (Marmiroli et al., 2020). While mercaptoacetic acid (MAA)-coated CdSe/ZnS QDs induced minimal toxicity on maize seedlings, pristine cadmium/tellurium (Cd/Te) QDs induced chromatin stress, mitochondrial damage and inhibition on green gram sprouts (Phaseolus radiatus L.) growth (Song et al., 2013).
There are several routes by which ENM can enter the soil-plant system. These include agricultural application of sewage sludges which often contain nSiO2, nTiO2, nZnO, and nAg; as well as the application of nano-enabled agrochemicals, resulting in the direct entry of nSiO2, nTiO2, nZnO, nFeOx, nCuO, CeO2 and nAg into agricultural soils (Lv et al., 2019; Verma et al., 2022).”

Additional references included:

Gardea-Torresdey J.L., Rico C.M., White J.C. Trophic transfer, transformation, and impact of engineered nanomaterials in terrestrial environments. Environ. Sci. Technol. 2014, 48, 2526−2540.

Keller A.A., McFerran S., Lazareva A., Suh S. 2013. Global life cycle releases of engineered nanomaterials. J. Nanopart. Res. 15, 1692−1709.

Keller A.A., Lazareva A. Predicted Releases of Engineered Nanomaterials: From Global to Regional to Local. Environ. Sci. Technol. Lett. 2014, 1, 1, 65–70.

Mitrano D.M., Motellier S., Clavaguera S., Nowack B. Review of nanomaterial aging and transformations through the life cycle of nano-enhanced products, Environment International, 2015,
77, 132-147.

Rincon A.M. 2019. Chapter 6 - Presence of nanomaterials on consumer products: food, cosmetics, and drugs. pp. 165-181. Marmiroli N., White J.C., Song J., Eds: In Micro and Nano Technologies, Exposure to Engineered Nanomaterials in the Environment, Elsevier, Amsterdam, The Netherlands.

Song U., Jun H., Waldman B., Roh J., Kim Y., Yi J., Lee E.J. Functional analyses of nanoparticle toxicity: a comparative study of the effects of TiO2 and Ag on tomatoes (Lycopersicon esculentum)
Ecotoxicol. Environ. Saf., 2013. 93, 60-67.

White J.C., Zuverza-Mena N., Elmer W.H. From nanotoxicology to nano-enabled agriculture: Following the science at the Connecticut Agricultural Experiment Station (CAES). Plant Nano Biology, 2022, 1, 100007. Doi: 10.1016/j.plana.2022.100007.

L50-55 Please focus on plants, especially agricultural crops.

We agree with Rev1 give more relevance to the ENMs in agricultural practices. The sentence has been modified and two new references have been introduced.

Lines 52-55: “In fact, it is known that ENMs exert important, but not completely understood, effects on biota; a particular topic of concern include the effect on crops, food production, and trophic transfer (Gardea-Torresdey et al., 2014; Ma et al., 2018; White et al., 2022).”

References added:

Gardea-Torresdey J.L., Rico C.M., White J.C. Trophic transfer, transformation, and impact of engineered nanomaterials in terrestrial environments. Environ. Sci. Technol. 2014, 48, 2526−2540.

White J.C., Zuverza-Mena N., Elmer W.H. From nanotoxicology to nano-enabled agriculture: Following the science at the Connecticut Agricultural Experiment Station (CAES). Plant Nano Biology, 2022, 1, 100007. Doi: 10.1016/j.plana.2022.100007.

L53-54 It is too broad to conclude that the impacts of nanomaterials on biota are poorly understood. There are hundreds of publications investigating this topic.

The sentence, as suggested by Rev1, have been modified in order to be more topic oriented.

Lines 52-55: “In fact, it is known that ENMs exert important, but not completely understood, effects on biota; a particular topic of concern include the effect on crops, food production, and trophic transfer (Gardea-Torresdey et al., 2014; Ma et al., 2018; White et al., 2022).”

L67-68 Please add nCuO, nTiO2, and nZnO. nTiO2 is the most used one among all the others.

Please check
[Ref]
[Ref]

The sentence has been modified as requested.

Lines 67-70: “ENMs with the greatest historical use include nanoscale ceria (nCeO2), silica (nSiO2), titania (nTiO2), as well as nanoscale copper oxide (nCuO), zinc oxide (nZnO) and nanosilver (nAg), and as such, release in the environment has been investigated (Keller & Lazareva, 2014; Mitrano et al., 2015).”

The references suggested have been also added:

Keller A.A., Lazareva A. Predicted Releases of Engineered Nanomaterials: From Global to Regional to Local. Environ. Sci. Technol. Lett. 2014, 1, 1, 65–70.

Mitrano D.M., Motellier S., Clavaguera S., Nowack B. Review of nanomaterial aging and transformations through the life cycle of nano-enhanced products, Environment International, 2015,
77, 132-147.

L77 Can you find any latest references? 2009 is more than ten years ago.

Unfortunately, we have not found any new significant update on permissible concentrations, especially for the European side. From this point of view the cited paper is still maintained as an EU standards. Thus, we prefer to maintain this reference. To provide additional perspective, we included two additional references:

Keller A.A., McFerran S., Lazareva A., Suh S. 2013. Global life cycle releases of engineered nanomaterials. J. Nanopart. Res. 15, 1692−1709.

Keller A.A., Lazareva A. Predicted Releases of Engineered Nanomaterials: From Global to Regional to Local. Environ. Sci. Technol. Lett. 2014, 1, 1, 65–70.

L92 Please refer to the right article.

We thank the Rev1for the comment, the reference has been properly corrected and added to the references.

Song U., Jun H., Waldman B., Roh J., Kim Y., Yi J., Lee E.J. Functional analyses of nanoparticle toxicity: a comparative study of the effects of TiO2 and Ag on tomatoes (Lycopersicon esculentum)
Ecotoxicol. Environ. Saf., 2013. 93, 60-67.

L99 In 1.1, "Once accumulated by plants" You haven't given any background regarding the uptake of ENMs by plants. At least add a few sentences to describe the possibility and give a few examples.

The beginning of the Paragraph, now 1.2, has been edited in order to give more information about the phases before plant accumulation. A new Figure 1 has been also included.

Lines 102-110: “Environmental and soil physico-chemical characteristics may significantly impact on ENMs aggregation, and dissolution, which may modify ENM bioavailability, uptake, translocation, and accumulation into terrestrial plants. In fact, light and temperature may induce potential changes on the ENM structure, such as during foliar spray (Hong et al., 2021). Once within plant tissues, ENM biotransformation may alter particle stability and behaviour in terms of interactions with biomolecules, triggering differential plant defense mechanisms (Ma et al., 2018; Rawat et al., 2018). ENMs are subject to a range of processes that may lead to their partial dissolution or result in structural modifications (Milosevic et al., 2020; Marmiroli et al., 2020). A schematic representation is reported in Figure 1.”

New reference added:

Hong J., Wang C., Wagner D.C., Gardea-Torresdey J.L., He F., Rico C.M. 2021. Foliar application of nanoparticles: mechanisms of absorption, transfer, and multiple impacts. Environ. Sci.: Nano, 8, 1196-1210.

Rawat S., Pullagurala V.L.R., Adisa I.O., Wang Y., Peralta-Videa J.R., Gardea-Torresdey J.L. Factors affecting fate and transport of engineered nanomaterials in terrestrial environments, COESH, 2018, 6, 47-53.

L105-107 "biotransformation of nanomaterials lead to the attachment of biological molecules", or does the attachment of biological molecules lead to NPs biotransformation? Or both? Any examples?

The paragraph has been modified in order to avoid misinterpretation. A new Figure 1 has been also introduced.

Lines 110-129: “Nanoparticle biotransformation is a highly complex and poorly understood series of events and has been shown to occur during weathering in the soil, trophic transfer, and translocation within plant tissues. These reactions are highly dynamic and alter the original pristine structure of the nanoparticles in a number of ways, potentially causing the release of ions, but also the consequent restructuring (or destructuring) of the nanoparticle (Servin et al., 2017a). Biotransformation of nanomaterials may rest on the interaction with biological molecules that stabilize their external reactivity, such as peptides including those involved in detoxification, (e.g. glutathione), fatty acids, secondary metabolites, and even components of cell

membranes (Marmiroli et al., 2020). Particle properties such as size, stability, charge, and dissolution may strongly influence other biotransformation mechanisms, potentially promoting enzymatic modification and functionalization with proteins (e.g., corona protein) present in the cytoplasm and organelles (Ma et al., 2018; Marmiroli et al., 2020). ENMs may maintain crystal structure when internalized by cells or may be disassembled and converted into less complex structures (by biological modification or chelation), thus reducing toxicity, and the risk of their accumulation and translocation (Wang et al., 2022). These post-uptake structural modifications involve specific parameters such as bond distance with other atoms or nature of the ligand atoms. In consideration of this, one objective in biotransformation studies is to investigate the physico-chemical forms (e.g., nanocrystal structure) within exposed tissues and to characterize the structural differences within the new biotransformed molecules, including identification of the biomolecules interacting with the ENMs (Castillo-Michel et al., 2017; Marmiroli et al., 2020).”

L110 More citations are needed to support the statement of "properties such as size, stability, charge, and dissolution influence the biotransformation". Besides, plant cultivars can also affect ENMs in planta biodistribution
[Ref]

The paragraph has been modified in order to include new references and also the effect of the plant cultivars.

Lines 115-131: “Biotransformation of nanomaterials may rest on the interaction with biological molecules that stabilize their external reactivity, such as peptides including those involved in detoxification, (e.g. glutathione), fatty acids, secondary metabolites, and even components of cell membranes (Marmiroli et al., 2020). Particle properties such as size, stability, charge, and dissolution may strongly influence other biotransformation mechanisms, potentially promoting enzymatic modification and functionalization with proteins (e.g., corona protein) present in the cytoplasm and organelles (Ma et al., 2018; Marmiroli et al., 2020). ENMs may maintain crystal structure when internalized by cells or may be disassembled and converted into less complex structures (by biological modification or chelation), thus reducing toxicity, and the risk of their accumulation and translocation (Wang et al., 2022). These post-uptake structural modifications involve specific parameters such as bond distance with other atoms or nature of the ligand atoms. In consideration of this, one objective in biotransformation studies is to investigate the physico-chemical forms (e.g., nanocrystal structure) within exposed tissues and to characterize the structural differences within the new biotransformed molecules, including identification of the biomolecules interacting with the ENMs (Castillo-Michel et al., 2017; Marmiroli et al., 2020). It has furthermore to consider how genetic diversity across different plant species and within the same plant species (in different cultivars) may influence the ENM uptake and translocation (Deng et al., 2020).”

New references included:

Deng C., Wang Y., Cota-Ruiz K., Reyes A., Sun Y., Peralta-Videa J.R., Hernandez-Viezcas J.A., Turley R.S., Niu G., Li C., Gardea-Torresdey J.L. Bok choy (Brassica rapa) grown in copper oxide nanoparticles-amended soils exhibits toxicity in a phenotype-dependent manner: Translocation, biodistribution and nutritional disturbance. J Haz Mater, 2020, 398, 122978.

Mitrano D.M., Motellier S., Clavaguera S., Nowack B. Review of nanomaterial aging and transformations through the life cycle of nano-enhanced products, Environment International, 2015,
77, 132-147.

Rawat S., Pullagurala V.L.R., Adisa I.O., Wang Y., Peralta-Videa J.R., Gardea-Torresdey J.L. Factors affecting fate and transport of engineered nanomaterials in terrestrial environments, COESH, 2018, 6, 47-53.

Xu T., Wang Y., Aytac Z., Zuverza-Mena N., Zhao Z., Hu X., Ng K.W., White J.C., Demokritou P.

Enhancing Agrichemical Delivery and Plant Development with Biopolymer-Based Stimuli Responsive Core–Shell Nanostructures. ACS Nano 2022, 16, 4, 6034–6048.

L125-147 Please add a few sentences to compare the differences between these synchrotron-based techniques and non-synchrotron-supported ones, For example, u-XRF vs. TEM-EDS. What are the advantages?

According to the Abbe's Law the resolution power of a particle is d.

$d=\lambda/ (2n \sin \alpha)$ In optical microscopy we can approximate d with λ.

In electron microscopy like TEM or SEM we use electrons that are accelerated passing through a potential difference they become thus equivalent to electromagnetic wave, as reported in the scheme.

Therefore, thanks to the De Broglie law we have $\lambda(nm) = 1.22/ \sqrt{V}$, where V is the acceleration voltage of the electrons.

In TEM V-= around 30 to 100, thus λ varies between 0.007 nm and 0.004 nm respectively. The smallest of these resolutions are enough to see the electron lattice. With the synchrotron we use photon that do not have mass, therefore the factor 1.22 is substituted by the non-relativistic mass of the electron which is $m=5.48579909065(16)\times10^{-4}$ Da (according to The NIST Reference on Constants, Units, and Uncertainty. NIST. 20 May 2019. Retrieved 2020-06-21), this makes the resolution even smaller and increases the penetration depth into the sample.

The EDX is another thing because it depends on the acceleration voltage of the particle or of the photon. Every Element in the periodic table has its own orbitals energies, and the acceleration voltage allows to excite one or more of these, independently if it comes from a TEM or from a synchrotron. Hence in this respect the two techniques are alike. (Goldstein, Newbury et al Editors. Scanning Electron Microscopy and X-Ray Microanalysis, Third Edition. 2003 Springer Science+Business Media LLC,233Spring Street, New York, NY 10013USA).

The text below has been added as a shortened version of these concepts.

Lines 160-165: "Synchrotron-based techniques use photons, which do not have mass; therefore the factor 1.22 is substituted by the non-relativistic mass of the electron which is $m=5.485\times10^{-4}$ Da. This makes the resolution even smaller and increases penetration depth into the sample. On the other hand, EDX depends on the acceleration voltage of the particle or of the photon. Every element has its own orbital energies, and the acceleration voltage allows excitation one or more of these, independently if it comes from a TEM or from a synchrotron (Goldstein et al., 2003)."

A new reference has been included:

Goldstein J.I., Newbury D.E., Echlin P., Joy D.C., Lyman C.E., Lifshin E., Sawyer L., Michael J.R. Editors. Scanning Electron Microscopy and X-Ray Microanalysis, Third Edition. 2003 Springer Science+Business Media LLC, 233 Spring Street, New York, NY 10013 USA.

L195 Add nano delivery system for smart release
[Ref]

We thank Rev1 for the suggestion. The reference has been included and the text has been edited accordingly:

Lines 210-215: "Beyond the potential adverse effects upon bioaccumulation from soil or other exposure routes, there is an increasing interest in exploiting the potential positive effects of ENMs on plants, aiming to improve crop yields and quality. A range of mechanisms, including direct use as nanofertilizers (Verma et al., 2022), nanocarriers (Karny et al., 2018), smart delivery systems (Xu et al., 2022) or when in

association to plant growth-promoting bacteria, are considered (Prado de Moraes et al., 2021).”

Xu T., Wang Y., Aytac Z., Zuverza-Mena N., Zhao Z., Hu X., Ng K.W., White J.C., Demokritou P.
Enhancing Agrichemical Delivery and Plant Development with Biopolymer-Based Stimuli Responsive Core–Shell Nanostructures. ACS Nano 2022, 16, 4, 6034–6048.

L251-267 Only one sentence was describing the synchrotron-based analysis. All the others were biomass or plant physiological responses. What does "limited stability of nLa2O3" mean? What are the results of the u-XRF analysis? Why is it unique compared to the other related analysis?

We thank Rev1 for the comment. The sentence has been clarified.

Lines 272-275:“The limited stability of nLa2O3, as compared to nCeO2, has been confirmed by -XRF analysis in Cucumis sativus L. through element speciation, dissolution studies in aqueous solution and in planta. After 14d treatment, the nCeO2 structure in the roots remains mostly preserved (more than 80%) while pristine nLa2O3 structure was observed at levels below 10% (Ma et al., 2015).”

Considering how Ce and La elemental properties play a fundamental role in their biotransformation, but also how their similarity in term of effects when analyzing the respective bulk forms, we believe that the direct comparison of the two nanoforms by XRF, as supported by data published in literature, could be an aspect to be described, and an interesting explanation for the physiological and molecular outcomes. Information about comparisons with other nanoforms has been reported at level of physiological and molecular analyses, both in terms of individual treatments, but also as a function of binary co-exposure (see Pagano et al., 2016, Pagano et al. 2017), which are reported in the text. This have been done with the aim to combine the potential results from physical and chemical analyses with results from physiological and molecular evidence, thereby providing a more mechanistic overview of the biotransformation processes.

L269 Please add more recently works:
[Ref]
[Ref]weathering effect in soil

The references indicated have been included and discussed.

Lines 312-318: “Interestingly, when either considering the utilization of pristine and coated nTiO2 (hydrophilic or hydrophobic) in carrot (Daucus carota L.), responses observed depended mainly on the nTiO2 surface coating, concentration and in soil weathering (Wang et al., 2021a; 2021b). Taproot and leaf fresh biomass and plant height were all increased with exposure, as well as nutrient uptake (Fe in leaves; Mg in taproots; Ca, Zn, K in roots). Conversely, sugar and starch contents were negatively affected, compromising the nutritional quality (Wang et al., 2021b).”

References included:

Wang Y., Deng C., Cota-Ruiz K., Tan W., Reyes A., Peralta-Videa J.R., Hernandez-Viezcas J.A., Li C., Gardea-Torresdey J.L. Effects of different surface-coated nTiO2 on full-grown carrot plants: Impacts on root splitting, essential elements, and Ti uptake. J Haz Mater, 2021a, 402, 123768.

Wang Y., Deng C., Cota-Ruiz K., Peralta-Videa J.R., Hernandez-Viezcas J.A., Gardea-Torresdey J.L. Soil-aged nano titanium dioxide effects on full-grown carrot: Dose and surface-coating dependent improvements on growth and nutrient quality. Scie Tot Environ, 2021b, 774, 145699.

L395-398 Please add more recent works regarding the nCuO-plant interactions.

Please check:
[Ref]
[Ref](in planta biodistribution of nCuO in the particle form and growth related gene expression)

The references indicated have been included and discussed.

Lines 452-464: “The grain of weedy and cultivated rice were differentially impacted by nCuO, bulk or ionic forms, showing also a cultivar-specific and concentration-dependent response. Cu translocation directly influenced plant yield, sugar production, starch content, protein content, and expression of auxin associated genes in grain (Deng et al., 2022b). Analyzing the effect of citric acid (CA) coated copper oxide (CA-nCuO) and its application (foliar spray or soil exposure) on the growth and physiology of soybean (Glycine max L.), nCuO appeared to be more accessible for plant uptake, as compared to CA-nCuO, decreasing the protein content, and inhibiting plant growth. CA reduced CuO NPs toxicity, demonstrating that surface modification may change the toxic properties of NPs (Deng et al., 2022c).
Treatment of Lactuca sativa L. with nCuO significantly increased biomass as compared to CuO microparticles (Wang et al., 2019). In addition, plants can benefit from nCuO treatment through enhanced defensive pathways, and through direct antimicrobial and antifungal activities (Elmer et al., 2018).”

References included:

Deng C., Wang Y., Navarro G., Sun Y., Cota-Ruiz K., Hernandez-Viezcas J.A., Niu G., Li C., White J.C., Gardea-Torresdey J. 2022b. Copper oxide (CuO) nanoparticles affect yield, nutritional quality, and auxin associated gene expression in weedy and cultivated rice (Oryza sativa L.) grains, Scie Tot Environ, 810, 152260.

Deng C., Wang Y., Cantu J.M., Valdes C., Navarro G., Cota-Ruiz K., Hernandez-Viezcas J.A., Li C., Elmer W.H., Dimkpa C.O., White J.C., Gardea-Torresdey, J.L. 2022c. Soil and foliar exposure of soybean (Glycine max) to Cu: Nanoparticle coating-dependent plant responses, NanoImpact, 26,100406.

Reviewer #2:

1. Please rewrite highlights 1 and 3. The highlight should point out the most critical findings, conclusions, or perspectives in this review.

Highlights have been modified in order to be more representative of the review text:

•Biotransformation is a fundamental phenomenon for understanding ENM-organism response mechanisms
•Synchrotron-based methodological analyses are critical for investigating ENM biotransformation
•Biotransformation of ENMs may have positive or negative effects when considering the agri-food application

2. Half of the text in this review are talking about the synchrotron-based analyses of ENM treated plant samples. However, it was not mentioned in the title, and the abstract only mentioned it once of its "increased use".

We thank Rev2 for the suggestions. Synchrotron-based techniques are becoming more important to comprehend the real physico-chemical forms of ENMs within plants tissues and organs and can give the missing information that we do not have from the physiological and molecular analyses, as suggested by the relevance of some of the most influential publications on this topic cited in the text (Castillo et al., 2017; Hameed et al., 2022). However, synchrotron-based techniques are not the main focus of the review. The mechanism of biotransformation behind the plant response to ENMs is the fundamental point. Synchrotron based techniques are certainly instrumental for shedding light on those mechanisms and the combination of results from physical analyses with physiological and molecular observations can give a more

comprehensive picture of what happens during ENMs treatment in planta. We are aware of the relevance of Synchrotron based techniques and we decided to give them an appropriate space in the introduction, in the (new) paragraph 1.2.

For these reasons we believe that title represents our work in the proper manner, and we would like to maintain it in the present form, where the emphasis is more on the mechanisms, while the techniques are tools to clarify those mechanisms.

The abstract, on the other hand, has been modified on order to be more informative on the points discussed in the main text:

“Research on engineered nanomaterials (ENMs) exposure has continued to expand rapidly, with a focus on uncovering the underlying mechanisms. The EU largely limits the number and the type of organisms that can be used for experimental testing through the 3R normative. There are different routes through which ENMs can enter the soil-plant system: this includes the agricultural application of sewage sludges, and the distribution of nano-enabled agrochemicals. However, a thorough understanding of the physiological and molecular implications of ENMs dispersion and chronic low-dose exposure remains elusive, thus requiring new evidence and a more mechanistic overview of pathways and major effectors involved in plants. Plants can offer a reliable alternative to conventional model systems to elucidate the concept of ENM biotransformation within tissues and organs, as a crucial step in understanding the mechanisms of ENM-organism interaction. To facilitate the understanding of the physico-chemical forms involved in plant response, synchrotron-based techniques have added new potential perspectives in studying the interactions between ENMs and biota. These techniques are providing new insights on the interactions between ENMs and biomolecules. The present review discusses the principal outcomes for ENMs after intake by plants, including possible routes of biotransformation which make their final fate less uncertain, and therefore require further investigation.”

3. The whole introduction (from L41-L96) is talking about the reported environmental exposure of ENM and the effects of quantum dots on plant growth. Please revise this part and be more focused on your main topic. This review aims to summarize the synchrotron-based analysis of the ENM biotransformation in plants and some molecular effects.

We thank Rev2 for the comment. Introduction has been modified in order to be more topic oriented.

Lines 47-99: “Although global food production has generally increased over time, the distribution has been far from equitable, with more than 820 million people having insufficient food and many more consuming low-quality diets leading directly to micronutrient deficiencies (Willett et al 2019; Zhong et al., 2020). In the past 20 years, and particularly in the past decade, engineered nanomaterials (ENMs) have seen dramatically increasing use and had an equally significant impact on ecosystems services and human society. As such, studies focused on the implications associated with their use are critical. In fact, it is known that ENMs exert important, but not completely understood, effects on biota; a particular topic of concern include the effect on crops, food production, and trophic transfer (Gardea-Torresdey et al., 2014; Ma et al., 2018; White et al., 2022).
The interplay between plant growth, dissolution, evaporation, and aggregation are key aspects of the dynamic behavior of ENMs in the environment. Directional aggregation can result in the formation of larger particles with a more complex morphology. However, given the complexity of natural environments, most nanomaterials can be found in hetero-aggregated composites of different inorganic and organic materials (Judy et al., 2012; Ma et al 2018). These aggregates can be very different from original simple pristine morphologies and may even form highly branched structures similar to fractals, all of which subsequently dramatically affect their reactivity and transport (Ma et al., 2018; Huangfu et al., 2019).
Sectors with a large nanomaterial application such as medicine and food production may experience greater risks of ENMs exposure due to their uses, with thousands of tons of ENMs that are eventually discarded into the three main environmental matrices: soil, water, and air (Keller et al., 2013; Zuverza Mena et al., 2017). ENMs with the

greatest historical use include nanoscale ceria (nCeO2), silica (nSiO2), titania (nTiO2), as well as nanoscale copper oxide (nCuO), zinc oxide (nZnO) and nanosilver (nAg), and as such, release in the environment has been investigated (Keller & Lazareva, 2014; Mitrano et al., 2015). Considering the long-time span of use of select materials (1950 to 2050), efforts to estimate ENMs release through commercial and associated activity into the environment have been undertaken. For example, for nSiO2, a global production between 100,000 and three million tons per year has been estimated, while for nCeO2, levels likely reach the upper limit of 10,000 tons per year, and for nAg, the literature reflects a production volume below 1,000 tons per year (Giese et al., 2018). The use of nTiO2 for the inhibition of microbial proliferation in food is one of the most important ways to prolong the shelf life of packaged products (Abutalib & Rajeh., 2020). However, a panel from EFSA concluded that E171 (TiO2) can no longer be considered as safe when used as a food additive (EFSA Journal 2021).
Gottschalk et al., (2009) calculated environmental concentrations using a probabilistic LCA (life cycle analysis) of ENM containing products. The authors modelled nTiO2, nZnO, nAg, carbon nanotubes (CNT), and fullerenes for the U.S., Europe, and Switzerland. The concentrations in the environment were calculated through probabilistic density functions and compared to ecotoxicology data. In the simulations, the values ranged from 0.003 ng L-1 (fullerenes) to 21 ng L-1 (nTiO2) for surface waters and from 4 ng L-1 for fullerenes to 4 µg L-1 for nTiO2 for sewage treatment effluents. In Europe and the U.S., ENMs increased annually in sludge treated soil, and ranged from 1 ng kg-1 for fullerenes to 89 µg kg-1 for nTiO2 (Gottschalk et al. 2009; Keller et al., 2013; Keller & Lazareva, 2014; Rincon, 2019).
Importantly, quantum dots (QDs), as well as many carbon- and metal-based ENMs, have been shown to produce negative effects on animals and plants as a function of dose, including accumulation, alteration of physiological and biochemical parameters, and reduced growth or yield (Oh et al., 2016; Zuverza-Mena et al., 2017). Quantum dots have shown to enter plant roots and to damage the cell wall, dysregulating metabolism (Marmiroli et al., 2020). While mercaptoacetic acid (MAA)-coated CdSe/ZnS QDs induced minimal toxicity on maize seedlings, pristine cadmium/tellurium (Cd/Te) QDs induced chromatin stress, mitochondrial damage and inhibition on green gram sprouts (Phaseolus radiatus L.) growth (Song et al., 2013).
There are several routes by which ENM can enter the soil-plant system. These include agricultural application of sewage sludges which often contain nSiO2, nTiO2, nZnO, and nAg; as well as the application of nano-enabled agrochemicals, resulting in the direct entry of nSiO2, nTiO2, nZnO, nFeOx, nCuO, CeO2 and nAg into agricultural soils (Lv et al., 2019; Verma et al., 2022).”

Additional references included:

Gardea-Torresdey J.L., Rico C.M., White J.C. Trophic transfer, transformation, and impact of engineered nanomaterials in terrestrial environments. Environ. Sci. Technol. 2014, 48, 2526−2540.

Keller A.A., McFerran S., Lazareva A., Suh S. 2013. Global life cycle releases of engineered nanomaterials. J. Nanopart. Res. 15, 1692−1709.

Keller A.A., Lazareva A. Predicted Releases of Engineered Nanomaterials: From Global to Regional to Local. Environ. Sci. Technol. Lett. 2014, 1, 1, 65–70.

Mitrano D.M., Motellier S., Clavaguera S., Nowack B. Review of nanomaterial aging and transformations through the life cycle of nano-enhanced products, Environment International, 2015,
77, 132-147.

Rincon A.M. 2019. Chapter 6 - Presence of nanomaterials on consumer products: food, cosmetics, and drugs. pp. 165-181. Marmiroli N., White J.C., Song J., Eds: In Micro and Nano Technologies, Exposure to Engineered Nanomaterials in the Environment, Elsevier, Amsterdam, The Netherlands.

Song U., Jun H., Waldman B., Roh J., Kim Y., Yi J., Lee E.J. Functional analyses of nanoparticle toxicity: a comparative study of the effects of TiO2 and Ag on tomatoes (Lycopersicon esculentum)
Ecotoxicol. Environ. Saf., 2013. 93, 60-67.

White J.C., Zuverza-Mena N., Elmer W.H. From nanotoxicology to nano-enabled agriculture: Following the science at the Connecticut Agricultural Experiment Station (CAES). Plant Nano Biology, 2022, 1, 100007. Doi: 10.1016/j.plana.2022.100007.

4. L66 Please add more appropriate citations. Can you provide any related numbers?

New references have been added in order to give more quantitative information:

Lines 64-70: “Sectors with a large nanomaterial application such as medicine and food production may experience greater risks of ENMs exposure due to their uses, with thousands of tons of ENMs that are eventually discarded into the three main environmental matrices: soil, water, and air (Keller et al., 2013; Zuverza Mena et al., 2017). ENMs with the greatest historical use include nanoscale ceria (nCeO2), silica (nSiO2), titania (nTiO2), as well as nanoscale copper oxide (nCuO), zinc oxide (nZnO) and nanosilver (nAg), and as such, release in the environment has been investigated (Keller & Lazareva, 2014; Mitrano et al., 2015).”

New references included:
Keller A.A., McFerran S., Lazareva A., Suh S. 2013. Global life cycle releases of engineered nanomaterials. J. Nanopart. Res. 15, 1692−1709.

Keller A.A., Lazareva A. Predicted Releases of Engineered Nanomaterials: From Global to Regional to Local. Environ. Sci. Technol. Lett. 2014, 1, 1, 65–70.

Mitrano D.M., Motellier S., Clavaguera S., Nowack B. Review of nanomaterial aging and transformations through the life cycle of nano-enhanced products, Environment International, 2015,
77, 132-147.

5. L67 and L78 Please define nSiO2, nAg, nZnO, and so forth.

We thank Rev2 for the comment. We included the definition of each ENM cited:

Lines 67-70: “ENMs with the greatest historical use include nanoscale ceria (nCeO2), silica (nSiO2), titania (nTiO2), as well as nanoscale copper oxide (nCuO), zinc oxide (nZnO) and nanosilver (nAg), and as such, release in the environment has been investigated (Keller & Lazareva, 2014; Mitrano et al., 2015).”

6. L71 Please add a citation.

The sentence has been fixed in order to give the proper citation.

Lines 72-75: “For example, for nSiO2, a global production between 100,000 and three million tons per year has been estimated, while for nCeO2, levels likely reach the upper limit of 10,000 tons per year, and for nAg, the literature reflects a production volume below 1,000 tons per year (Giese et al., 2018).”

7. L73 TiO2 or nanoscale TiO2?

The typo has been fixed.

8. You only have one subsection "1.1" in part 1. Please consider merging it into part 1. Or change it to 1.2, and put all the content before it into 1.1.

Paragraph subdivision has been updated, including an initial subsection called “1. Engineered nanomaterial (ENM) biotransformation”. The first section is now “1.1. ENMs: from exposure to biotransformation”, while the previous section 1.1 is now shifted to 1.2.

9. L101-105 Please check
[Ref]
[Ref] for factors and mechanisms of the NPs biotransformation, especially the effect of soil weathering on plant responses.

We thank Rev2 for the suggestions. The text has been updated, as reported:

Lines 102-121: “Environmental and soil physico-chemical characteristics may significantly impact on ENMs aggregation, and dissolution, which may modify ENM bioavailability, uptake, translocation, and accumulation into terrestrial plants. In fact, light and temperature may induce potential changes on the ENM structure, such as during foliar spray (Hong et al., 2021). Once within plant tissues, ENM biotransformation may alter particle stability and behaviour in terms of interactions with biomolecules, triggering differential plant defense mechanisms (Ma et al., 2018; Rawat et al., 2018). ENMs are subject to a range of processes that may lead to their partial dissolution or result in structural modifications (Milosevic et al., 2020; Marmiroli et al., 2020). A schematic representation is reported in Figure 1. Nanoparticle biotransformation is a highly complex and poorly understood series of events and has been shown to occur during weathering in the soil, trophic transfer, and translocation within plant tissues. These reactions are highly dynamic and alter the original pristine structure of the nanoparticles in a number of ways, potentially causing the release of ions, but also the consequent restructuring (or destructuring) of the nanoparticle (Servin et al., 2017a). Biotransformation of nanomaterials may rest on the interaction with biological molecules that stabilize their external reactivity, such as peptides including those involved in detoxification, (e.g. glutathione), fatty acids, secondary metabolites, and even components of cell membranes (Marmiroli et al., 2020). Particle properties such as size, stability, charge, and dissolution may strongly influence other biotransformation mechanisms, potentially promoting enzymatic modification and functionalization with proteins (e.g., corona protein) present in the cytoplasm and organelles (Ma et al., 2018; Marmiroli et al., 2020).”

A new reference has been included, as well as an additional Figure (new Figure 1):

Hong J., Wang C., Wagner D.C., Gardea-Torresdey J.L., He F., Rico C.M. 2021. Foliar application of nanoparticles: mechanisms of absorption, transfer, and multiple impacts. Environ. Sci.: Nano, 8, 1196-1210.

Rawat S., Pullagurala V.L.R., Adisa I.O., Wang Y., Peralta-Videa J.R., Gardea-Torresdey J.L. Factors affecting fate and transport of engineered nanomaterials in terrestrial environments, COESH, 2018, 6, 47-53.

The suggested reference related to “Soil-aged nano titanium dioxide effects on full-grown carrot” has been included in the main text in the case studies reported in the paragraph 2.2 as Wang et al., 2021b.

10. L110-113 Besides the listed possibilities, ENMs can also remain as nanoscale particles with/without the loss of surface coatings in plant tissues after being uptaken. Please check
[ref]

We thank Rev 2 for the suggestion. The reference has been cited, as reported.

Lines 121-124: “ENMs may maintain crystal structure when internalized by cells or may be disassembled and converted into less complex structures (by biological modification or chelation), thus reducing toxicity, and the risk of their accumulation and translocation (Wang et al., 2022).”

11. L178-181 Add more latest references. Please check
[ref]
[ref]

	We thank Rev2 for the suggestions. The text has been updated, as reported: Lines 196-199: “Studies have added significant molecular data on the effects of ENMs exposure in plants (Schwab et al., 2016; Ma et al., 2018). Different results are often observed for the same element as a function of its form or size, i.e. nanostructured, bulk, or ionic species (Pagano et al., 2016; Wang et al., 2022).” The suggested reference related to “Copper oxide (CuO) nanoparticles affect yield, nutritional quality, and auxin associated gene expression in weedy and cultivated rice” has been included in the text in the case studies reported in the paragraph 2.6 as Deng et al., 2022b. 12. L202 Can you briefly describe Table 1? What is Table 1 for and why are genes listed? Were they significantly affected by the ENM exposure? All the citations listed in Table 1 are related to the author themselves. Please include some works from the others. Genes reported in Figure 2 (former Figure 1) and Table 1 are some of those that are modulated by the different type of ENMs as reported in the cited studies. Other genes also resulted responsiveness in a ENM-specific manner during exposure and are considered for this reason as potential biomarker of exposure/effect. Moreover, these specific biomarkers are also able to testify how the modulation of the genes in the different organs is in some cases convergent between differential forms (nano, bulk, ion) of the same element. Considering that the concept of nano-specific biomarker has been introduced in some of our research groups papers, we thought to include these references in the Table 1. This was not the case of Table 2, in which papers not related to our research group on the principal evidence of the ENM biotransformation in plant observed by physiological, molecular and synchrotron-based analyses have been included. Table 1 description has b...

To Co-Editors-in-Chief, Environmental Pollution Journal

Prof. Jörg Rinklebe,

Prof. Christian Sonne,

Prof. Eddy Zeng

To Special Issue Editor,

Prof. Da Chen

To Guest Editor,

Prof. M.H. Siddiqui

Special Issue “Emerging Pollutants and their effects on plants: present and future challenges, and their solutions”

Dear Editor,

We thank the Editor and Reviewers for their comments and suggestions which gave the opportunity to improve our Review manuscript “Nanomaterials biotransformation: In planta mechanisms of action” in all its aspects.

As requested, the manuscript has been modified, including the abstract, highlights and paragraph subdivisions (in the introduction). In addition, the introduction has been thoroughly edited. A list of new references has been included. A new Figure 1 has been included in order to give more explanations to the biotransformation mechanisms.

Below are the point-to-point answers to Reviewers queries.

We believe the manuscript has been strongly improved and hope it is now acceptable for publication.

Kind Regards

Marta Marmiroli

To Co-Editors-in-Chief, Environmental Pollution Journal

Prof. Jörg Rinklebe,
Prof. Christian Sonne,
Prof. Eddy Zeng

To Special Issue Editor,

Prof. Da Chen

To Guest Editor,

Prof. M.H. Siddiqui

Special Issue "Emerging Pollutants and their effects on plants: present and future challenges, and their solutions"

Dear Editor,

We thank the Editor and Reviewers for their comments and suggestions which gave the opportunity to improve our Review manuscript "Nanomaterials biotransformation: In planta mechanisms of action" in all its aspects.

As requested, the manuscript has been modified, including the abstract, highlights and paragraph subdivisions (in the introduction). In addition, the introduction has been thoroughly edited. A list of new references has been included. A new Figure 1 has been included in order to give more explanations to the biotransformation mechanisms.

Below are the point-to-point answers to Reviewers queries.

We believe the manuscript has been strongly improved and hope it is now acceptable for publication.

Kind Regards

Marta Marmiroli

Editor and Reviewer comments:

***Reviewer #1**: Manuscript review of ENVPOL-D-22-05734 "Nanomaterials biotransformation: In planta mechanisms of action"*

This review article summarized recent works on the nanomaterial biotransformation within plant tissues using synchrotron-based techniques. The impacts of engineered nanomaterials (ENMs) on plant gene expression were also included. Specifically, studies regarding the biointeraction between plants and ENMs (nanoscale CeO2, La2O3, TiO2, Au, FeOx, ZVI, ZnO, CuO, and CdS QDs) were listed and discussed in detail. This review paper contributes to the deep understanding of the fate of ENMs in plant tissues, and the related genetic regulation of plants induced by ENM exposures. The contents are within the scope of the Environmental Pollution. However, I have a number of general concerns, followed by a range of specific comments, which prevent me from recommending this paper for publication in its current form.

General Comments-
Some parts of the abstract and introduction are not quite relevant to the main topic, and need to be revised. The main topic, synchrotron-based analysis of ENMs biotransformation, should be more emphasized and discussed in more detail. In part 1, there was only one sub-title 1.1. None of the figures or the tables provided any information related to the in planta biotransformation. Several figures with summarized information instead of only one figure are better for a review article. Some references are too old or not representative. They should be up to date.

We thank Rev1 for the constructive comments and suggestions given. The manuscript has been thoroughly improved in order to answer to all comments reported. Paragraph subdivision has been updated. Several new references and an additional Figure have been included. All the edited sections have been reported in the answer to each specific question.

Specific Comments-
The abstract used a large amount of space describing exposure pathways and low-dose effects. However, they were not well discussed in the main text. Similarly, the "potential applicability" was not given in the main text. The abstract should contain the most significant findings, critical comments on the current studies, or perspectives for future research.

The abstract has been modified in order to be more informative on the points discussed in the main text. The abstract now reads as follows:

"Research on engineered nanomaterials (ENMs) exposure has continued to expand rapidly, with a focus on uncovering the underlying mechanisms. The EU largely limits the number and the type of organisms that can be used for experimental testing through the 3R normative. There are different routes through which ENMs can enter the soil-plant system: this includes the agricultural application of sewage sludges, and the distribution of nano-enabled agrochemicals. However, a thorough understanding of the physiological and molecular implications of ENMs dispersion and chronic low-dose exposure remains elusive, thus requiring new evidence and a more mechanistic overview of pathways and major effectors involved in plants. Plants can offer a reliable alternative to conventional model systems to elucidate the concept of ENM biotransformation within tissues and organs, as a crucial step in understanding the mechanisms of ENM-organism interaction. To facilitate the understanding of the physico-chemical forms involved in plant response, synchrotron-based techniques have added new potential perspectives in studying the interactions between ENMs and

biota. These techniques are providing new insights on the interactions between ENMs and biomolecules. The present review discusses the principal outcomes for ENMs after intake by plants, including possible routes of biotransformation which make their final fate less uncertain, and therefore require further investigation."

The Paragraph 3 has been also modified to give a more timely reference to potential applicability:

Lines 558-567: "This information is highly relevant with regard to potential applicability: ENMs can interact with sensitive ecosystem components within trophic food chains, affect microbial populations in soil, enter into the plant and where they can be translocated to different tissues and organs, including the edible tissues or organs (Holden et al., 2013; Liu et al., 2015). Biotransformation can occur at each step within these processes, modifying and/or amplifying ENM effects at organism level. These interactions from the level of ecosystem, organism, tissue, cell, and organelles become key factors when applying "ENM biotransformation" as a concept for a safer design, when considering applications for agriculture and food production, and for minimizing the adverse biological impact (Burello & Worth, 2015; Pagano et al., 2018; Lowry et al., 2019; Kah et al., 2019; Zulfiqar et al., 2019; Ma et al., 2020; Hameed et al., 2022; Xu et al., 2022)."

A new reference has been also included:

Xu T., Wang Y., Aytac Z., Zuverza-Mena N., Zhao Z., Hu X., Ng K.W., White J.C., Demokritou P. Enhancing Agrichemical Delivery and Plant Development with Biopolymer-Based Stimuli Responsive Core–Shell Nanostructures. ACS Nano 2022, 16, 4, 6034–6048.

You mentioned that three billion tons of crops are produced per year and cost a lot of source and energy in L41-47. What is the purpose? Please consider deleting them.

The new paragraph 1.1 entitled "from ENM exposure to biotransformation" has been reduced and thoroughly edited in order to be more focused on the main topic of the review:

Lines 47-99: "Although global food production has generally increased over time, the distribution has been far from equitable, with more than 820 million people having insufficient food and many more consuming low-quality diets leading directly to micronutrient deficiencies (Willett et al 2019; Zhong et al., 2020). In the past 20 years, and particularly in the past decade, engineered nanomaterials (ENMs) have seen dramatically increasing use and had an equally significant impact on ecosystems services and human society. As such, studies focused on the implications associated with their use are critical. In fact, it is known that ENMs exert important, but not completely understood, effects on biota; a particular topic of concern include the effect on crops, food production, and trophic transfer (Gardea-Torresdey et al., 2014; Ma et al., 2018; White et al., 2022).
The interplay between plant growth, dissolution, evaporation, and aggregation are key aspects of the dynamic behavior of ENMs in the environment. Directional aggregation can result in the formation of larger particles with a more complex morphology. However, given the complexity of natural environments, most nanomaterials can be found in hetero-aggregated composites of different inorganic and organic materials (Judy et al., 2012; Ma et al 2018). These aggregates can be very different from original simple pristine morphologies and may even form highly branched structures similar to fractals, all of which subsequently dramatically affect their reactivity and transport (Ma et al., 2018; Huangfu et al., 2019).

Sectors with a large nanomaterial application such as medicine and food production may experience greater risks of ENMs exposure due to their uses, with thousands of tons of ENMs that are eventually discarded into the three main environmental matrices: soil, water, and air (Keller et al., 2013; Zuverza Mena et al., 2017). ENMs with the greatest historical use include nanoscale ceria (nCeO2), silica (nSiO2), titania (nTiO2), as well as nanoscale copper oxide (nCuO), zinc oxide (nZnO) and nanosilver (nAg), and as such, release in the environment has been investigated (Keller & Lazareva, 2014; Mitrano et al., 2015). Considering the long-time span of use of select materials (1950 to 2050), efforts to estimate ENMs release through commercial and associated activity into the environment have been undertaken. For example, for nSiO2, a global production between 100,000 and three million tons per year has been estimated, while for $nCeO_2$, levels likely reach the upper limit of 10,000 tons per year, and for nAg, the literature reflects a production volume below 1,000 tons per year (Giese et al., 2018). The use of nTiO2 for the inhibition of microbial proliferation in food is one of the most important ways to prolong the shelf life of packaged products (Abutalib & Rajeh., 2020). However, a panel from EFSA concluded that E171 (TiO2) can no longer be considered as safe when used as a food additive (EFSA Journal 2021).
Gottschalk et al., (2009) calculated environmental concentrations using a probabilistic LCA (life cycle analysis) of ENM containing products. The authors modelled nTiO2, nZnO, nAg, carbon nanotubes (CNT), and fullerenes for the U.S., Europe, and Switzerland. The concentrations in the environment were calculated through probabilistic density functions and compared to ecotoxicology data. In the simulations, the values ranged from 0.003 ng L-1 (fullerenes) to 21 ng L-1 (nTiO2) for surface waters and from 4 ng L-1 for fullerenes to 4 µg L-1 for nTiO2 for sewage treatment effluents. In Europe and the U.S., ENMs increased annually in sludge treated soil, and ranged from 1 ng kg-1 for fullerenes to 89 µg kg-1 for nTiO2 (Gottschalk et al. 2009; Keller et al., 2013; Keller & Lazareva, 2014; Rincon, 2019).
Importantly, quantum dots (QDs), as well as many carbon- and metal-based ENMs, have been shown to produce negative effects on animals and plants as a function of dose, including accumulation, alteration of physiological and biochemical parameters, and reduced growth or yield (Oh et al., 2016; Zuverza-Mena et al., 2017). Quantum dots have shown to enter plant roots and to damage the cell wall, dysregulating metabolism (Marmiroli et al., 2020). While mercaptoacetic acid (MAA)-coated CdSe/ZnS QDs induced minimal toxicity on maize seedlings, pristine cadmium/tellurium (Cd/Te) QDs induced chromatin stress, mitochondrial damage and inhibition on green gram sprouts (*Phaseolus radiatus* L.) growth (Song et al., 2013). There are several routes by which ENM can enter the soil-plant system. These include agricultural application of sewage sludges which often contain nSiO2, nTiO2, nZnO, and nAg; as well as the application of nano-enabled agrochemicals, resulting in the direct entry of nSiO2, nTiO2, nZnO, nFeOx, nCuO, CeO2 and nAg into agricultural soils (Lv et al., 2019; Verma et al., 2022)."

Additional references included:

Gardea-Torresdey J.L., Rico C.M., White J.C. Trophic transfer, transformation, and impact of engineered nanomaterials in terrestrial environments. Environ. Sci. Technol. 2014, 48, 2526−2540.

Keller A.A., McFerran S., Lazareva A., Suh S. 2013. Global life cycle releases of engineered nanomaterials. J. Nanopart. Res. 15, 1692−1709.

Keller A.A., Lazareva A. Predicted Releases of Engineered Nanomaterials: From Global to Regional to Local. Environ. Sci. Technol. Lett. 2014, 1, 1, 65–70.

Mitrano D.M., Motellier S., Clavaguera S., Nowack B. Review of nanomaterial aging and transformations through the life cycle of nano-enhanced products, Environment International, 2015,

77, 132-147.

Rincon A.M. 2019. Chapter 6 - Presence of nanomaterials on consumer products: food, cosmetics, and drugs. pp. 165-181. Marmiroli N., White J.C., Song J., Eds: In Micro and Nano Technologies, Exposure to Engineered Nanomaterials in the Environment, Elsevier, Amsterdam, The Netherlands.

Song U., Jun H., Waldman B., Roh J., Kim Y., Yi J., Lee E.J. Functional analyses of nanoparticle toxicity: a comparative study of the effects of TiO2 and Ag on tomatoes (Lycopersicon esculentum) Ecotoxicol. Environ. Saf., 2013. 93, 60-67.

White J.C., Zuverza-Mena N., Elmer W.H. From nanotoxicology to nano-enabled agriculture: Following the science at the Connecticut Agricultural Experiment Station (CAES). Plant Nano Biology, 2022, 1, 100007. Doi: 10.1016/j.plana.2022.100007.

L50-55 Please focus on plants, especially agricultural crops.

We agree with Rev1 give more relevance to the ENMs in agricultural practices. The sentence has been modified and two new references have been introduced.

Lines 52-55: “In fact, it is known that ENMs exert important, but not completely understood, effects on biota; a particular topic of concern include the effect on crops, food production, and trophic transfer (Gardea-Torresdey et al., 2014; Ma et al., 2018; White et al., 2022).”

References added:

Gardea-Torresdey J.L., Rico C.M., White J.C. Trophic transfer, transformation, and impact of engineered nanomaterials in terrestrial environments. Environ. Sci. Technol. 2014, 48, 2526−2540.

White J.C., Zuverza-Mena N., Elmer W.H. From nanotoxicology to nano-enabled agriculture: Following the science at the Connecticut Agricultural Experiment Station (CAES). Plant Nano Biology, 2022, 1, 100007. Doi: 10.1016/j.plana.2022.100007.

L53-54 It is too broad to conclude that the impacts of nanomaterials on biota are poorly understood. There are hundreds of publications investigating this topic.

The sentence, as suggested by Rev1, have been modified in order to be more topic oriented.

Lines 52-55: “In fact, it is known that ENMs exert important, but not completely understood, effects on biota; a particular topic of concern include the effect on crops, food production, and trophic transfer (Gardea-Torresdey et al., 2014; Ma et al., 2018; White et al., 2022).”

L67-68 Please add nCuO, nTiO2, and nZnO. nTiO2 is the most used one among all the others.

Please check
[Ref]
[Ref]

The sentence has been modified as requested.

Lines 67-70: “ENMs with the greatest historical use include nanoscale ceria (nCeO2), silica (nSiO2), titania (nTiO2), as well as nanoscale copper oxide (nCuO), zinc oxide (nZnO) and nanosilver (nAg), and as such, release in the environment has been investigated (Keller & Lazareva, 2014; Mitrano et al., 2015).”

The references suggested have been also added:

Keller A.A., Lazareva A. Predicted Releases of Engineered Nanomaterials: From Global to Regional to Local. Environ. Sci. Technol. Lett. 2014, 1, 1, 65–70.

Mitrano D.M., Motellier S., Clavaguera S., Nowack B. Review of nanomaterial aging and transformations through the life cycle of nano-enhanced products, Environment International, 2015, 77, 132-147.

L77 Can you find any latest references? 2009 is more than ten years ago.

Unfortunately, we have not found any new significant update on permissible concentrations, especially for the European side. From this point of view the cited paper is still maintained as an EU standards. Thus, we prefer to maintain this reference. To provide additional perspective, we included two additional references:

Keller A.A., McFerran S., Lazareva A., Suh S. 2013. Global life cycle releases of engineered nanomaterials. J. Nanopart. Res. 15, 1692−1709.

Keller A.A., Lazareva A. Predicted Releases of Engineered Nanomaterials: From Global to Regional to Local. Environ. Sci. Technol. Lett. 2014, 1, 1, 65–70.

L92 Please refer to the right article.

We thank the Rev1for the comment, the reference has been properly corrected and added to the references.

Song U., Jun H., Waldman B., Roh J., Kim Y., Yi J., Lee E.J. Functional analyses of nanoparticle toxicity: a comparative study of the effects of TiO2 and Ag on tomatoes (Lycopersicon esculentum) Ecotoxicol. Environ. Saf., 2013. 93, 60-67.

L99 In 1.1, "Once accumulated by plants" You haven't given any background regarding the uptake of ENMs by plants. At least add a few sentences to describe the possibility and give a few examples.

The beginning of the Paragraph, now 1.2, has been edited in order to give more information about the phases before plant accumulation. A new Figure 1 has been also included.

Lines 102-110: “Environmental and soil physico-chemical characteristics may significantly impact on ENMs aggregation, and dissolution, which may modify ENM bioavailability, uptake, translocation, and accumulation into terrestrial plants. In fact, light and temperature may induce potential changes on the ENM structure, such as during foliar spray (Hong et al., 2021). Once within plant tissues, ENM biotransformation may alter particle stability and behaviour in terms of interactions with biomolecules, triggering differential plant defense mechanisms (Ma et al., 2018; Rawat et al., 2018). ENMs are subject to a range of processes that may lead to their partial dissolution or result in structural modifications (Milosevic et al., 2020; Marmiroli et al., 2020). A schematic representation is reported in Figure 1.”

New reference added:

Hong J., Wang C., Wagner D.C., Gardea-Torresdey J.L., He F., Rico C.M. 2021. Foliar application of nanoparticles: mechanisms of absorption, transfer, and multiple impacts. Environ. Sci.: Nano, 8, 1196-1210.

Rawat S., Pullagurala V.L.R., Adisa I.O., Wang Y., Peralta-Videa J.R., Gardea-Torresdey J.L. Factors affecting fate and transport of engineered nanomaterials in terrestrial environments, COESH, 2018, 6, 47-53.

L105-107 "biotransformation of nanomaterials lead to the attachment of biological molecules", or does the attachment of biological molecules lead to NPs biotransformation? Or both? Any examples?

The paragraph has been modified in order to avoid misinterpretation. A new Figure 1 has been also introduced.

Lines 110-129: “Nanoparticle biotransformation is a highly complex and poorly understood series of events and has been shown to occur during weathering in the soil, trophic transfer, and translocation within plant tissues. These reactions are highly dynamic and alter the original pristine structure of the nanoparticles in a number of ways, potentially causing the release of ions, but also the consequent restructuring (or destructuring) of the nanoparticle (Servin et al., 2017a). Biotransformation of nanomaterials may rest on the interaction with biological molecules that stabilize their external reactivity, such as peptides including those involved in detoxification, (*e.g.* glutathione), fatty acids, secondary metabolites, and even components of cell membranes (Marmiroli et al., 2020). Particle properties such as size, stability, charge, and dissolution may strongly influence other biotransformation mechanisms, potentially promoting enzymatic modification and functionalization with proteins (e.g., corona protein) present in the cytoplasm and organelles (Ma et al., 2018; Marmiroli et al., 2020). ENMs may maintain crystal structure when internalized by cells or may be disassembled and converted into less complex structures (by biological modification or chelation), thus reducing toxicity, and the risk of their accumulation and translocation (Wang et al., 2022). These post-uptake structural modifications involve specific parameters such as bond distance with other atoms or nature of the ligand atoms. In consideration of this, one objective in biotransformation studies is to investigate the physico-chemical forms (e.g., nanocrystal structure) within exposed tissues and to characterize the structural differences within the new biotransformed molecules, including identification of the biomolecules interacting with the ENMs (Castillo-Michel et al., 2017; Marmiroli et al., 2020).”

L110 More citations are needed to support the statement of "properties such as size, stability, charge, and dissolution influence the biotransformation". Besides, plant cultivars can also affect ENMs in planta biodistribution
[Ref]

The paragraph has been modified in order to include new references and also the effect of the plant cultivars.

Lines 115-131: "Biotransformation of nanomaterials may rest on the interaction with biological molecules that stabilize their external reactivity, such as peptides including those involved in detoxification, (*e.g.* glutathione), fatty acids, secondary metabolites, and even components of cell membranes (Marmiroli et al., 2020). Particle properties such as size, stability, charge, and dissolution may strongly influence other biotransformation mechanisms, potentially promoting enzymatic modification and functionalization with proteins (e.g., corona protein) present in the cytoplasm and organelles (Ma et al., 2018; Marmiroli et al., 2020). ENMs may maintain crystal structure when internalized by cells or may be disassembled and converted into less complex structures (by biological modification or chelation), thus reducing toxicity, and the risk of their accumulation and translocation (Wang et al., 2022). These post-uptake structural modifications involve specific parameters such as bond distance with other atoms or nature of the ligand atoms. In consideration of this, one objective in biotransformation studies is to investigate the physico-chemical forms (e.g., nanocrystal structure) within exposed tissues and to characterize the structural differences within the new biotransformed molecules, including identification of the biomolecules interacting with the ENMs (Castillo-Michel et al., 2017; Marmiroli et al., 2020). It has furthermore to consider how genetic diversity across different plant species and within the same plant species (in different cultivars) may influence the ENM uptake and translocation (Deng et al., 2020)."

New references included:

Deng C., Wang Y., Cota-Ruiz K., Reyes A., Sun Y., Peralta-Videa J.R., Hernandez-Viezcas J.A., Turley R.S., Niu G., Li C., Gardea-Torresdey J.L. Bok choy (*Brassica rapa*) grown in copper oxide nanoparticles-amended soils exhibits toxicity in a phenotype-dependent manner: Translocation, biodistribution and nutritional disturbance. J Haz Mater, 2020, 398, 122978.

Mitrano D.M., Motellier S., Clavaguera S., Nowack B. Review of nanomaterial aging and transformations through the life cycle of nano-enhanced products, Environment International, 2015, 77, 132-147.

Rawat S., Pullagurala V.L.R., Adisa I.O., Wang Y., Peralta-Videa J.R., Gardea-Torresdey J.L. Factors affecting fate and transport of engineered nanomaterials in terrestrial environments, COESH, 2018, 6, 47-53.

Xu T., Wang Y., Aytac Z., Zuverza-Mena N., Zhao Z., Hu X., Ng K.W., White J.C., Demokritou P. Enhancing Agrichemical Delivery and Plant Development with Biopolymer-Based Stimuli Responsive Core–Shell Nanostructures. ACS Nano 2022, 16, 4, 6034–6048.

L125-147 Please add a few sentences to compare the differences between these synchrotron-based techniques and non-synchrotron-supported ones, For example, u-XRF vs. TEM-EDS. What are the advantages?

According to the Abbe's Law the resolution power of a particle is d.

d=λ/ (2n sin α) In optical microscopy we can approximate d with λ.

In electron microscopy like TEM or SEM we use electrons that are accelerated passing through a potential difference they become thus equivalent to electromagnetic wave, as reported in the scheme.

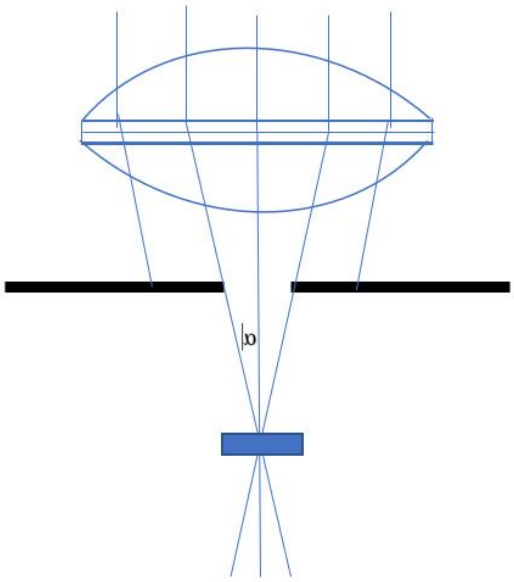

Therefore, thanks to the De Broglie law we have λ(nm) = 1.22/ √V, where V is the acceleration voltage of the electrons.

In TEM V-= around 30 to 100, thus λ varies between 0.007 nm and 0.004 nm respectively. The smallest of these resolutions are enough to see the electron lattice. With the synchrotron we use photon that do not have mass, therefore the factor 1.22 is substituted by the non-relativistic mass of the electron which is m=5.48579909065(16)×10^{-4} Da (according to *The NIST Reference on Constants, Units, and Uncertainty. NIST. 20 May 2019. Retrieved 2020-06-21*), this makes the resolution even smaller and increases the penetration depth into the sample.

The EDX is another thing because it depends on the acceleration voltage of the particle or of the photon. Every Element in the periodic table has its own orbitals energies, and the acceleration voltage allows to excite one or more of these, independently if it comes from a TEM or from a synchrotron. Hence in this respect the two techniques are alike. (Goldstein, Newbury et al Editors. Scanning Electron Microscopy and X-Ray Microanalysis, Third Edition. 2003 Springer Science+Business Media LLC,233Spring Street, New York, NY 10013USA).

The text below has been added as a shortened version of these concepts.

Lines 160-165: "Synchrotron-based techniques use photons, which do not have mass; therefore the factor 1.22 is substituted by the non-relativistic mass of the electron which is m=5.485x10−4 Da. This makes the resolution even smaller and increases penetration depth into the sample. On the other hand, EDX depends on the acceleration voltage of the particle or of the photon. Every element has its own orbital energies, and the acceleration voltage allows excitation one or more of these, independently if it comes from a TEM or from a synchrotron (Goldstein et al., 2003)."

A new reference has been included:

Goldstein J.I., Newbury D.E., Echlin P., Joy D.C., Lyman C.E., Lifshin E., Sawyer L., Michael J.R. Editors. Scanning Electron Microscopy and X-Ray Microanalysis, Third Edition. 2003 Springer Science+Business Media LLC, 233 Spring Street, New York, NY 10013 USA.

L195 Add nano delivery system for smart release
[Ref]

We thank Rev1 for the suggestion. The reference has been included and the text has been edited accordingly:

Lines 210-215: "Beyond the potential adverse effects upon bioaccumulation from soil or other exposure routes, there is an increasing interest in exploiting the potential positive effects of ENMs on plants, aiming to improve crop yields and quality. A range of mechanisms, including direct use as nanofertilizers (Verma et al., 2022), nanocarriers (Karny et al., 2018), smart delivery systems (Xu et al., 2022) or when in association to plant growth-promoting bacteria, are considered (Prado de Moraes et al., 2021)."

Xu T., Wang Y., Aytac Z., Zuverza-Mena N., Zhao Z., Hu X., Ng K.W., White J.C., Demokritou P. Enhancing Agrichemical Delivery and Plant Development with Biopolymer-Based Stimuli Responsive Core–Shell Nanostructures. ACS Nano 2022, 16, 4, 6034–6048.

L251-267 Only one sentence was describing the synchrotron-based analysis. All the others were biomass or plant physiological responses. What does "limited stability of nLa2O3" mean? What are the results of the u-XRF analysis? Why is it unique compared to the other related analysis?

We thank Rev1 for the comment. The sentence has been clarified.

Lines 272-275:"The limited stability of nLa2O3, as compared to nCeO2, has been confirmed by μ-XRF analysis in *Cucumis sativus* L. through element speciation, dissolution studies in aqueous solution and *in planta*. After 14d treatment, the nCeO2 structure in the roots remains mostly preserved (more than 80%) while pristine nLa2O3 structure was observed at levels below 10% (Ma et al., 2015)."

Considering how Ce and La elemental properties play a fundamental role in their biotransformation, but also how their similarity in term of effects when analyzing the respective bulk forms, we believe that the direct comparison of the two nanoforms by XRF, as supported by data published in literature, could be an aspect to be described, and an interesting explanation for the physiological and molecular outcomes. Information about comparisons with other nanoforms has been reported at level of physiological and molecular analyses, both in terms of individual treatments, but also as a function of binary co-exposure (see Pagano et al., 2016, Pagano et al. 2017), which are reported in the text. This have been done with the aim to combine the potential results from physical and chemical analyses with results from physiological and molecular evidence, thereby providing a more mechanistic overview of the biotransformation processes.

L269 Please add more recently works:
[Ref]
[Ref]weathering effect in soil

The references indicated have been included and discussed.

Lines 312-318: “Interestingly, when either considering the utilization of pristine and coated nTiO2 (hydrophilic or hydrophobic) in carrot (*Daucus carota* L.), responses observed depended mainly on the nTiO2 surface coating, concentration and in soil weathering (Wang et al., 2021a; 2021b). Taproot and leaf fresh biomass and plant height were all increased with exposure, as well as nutrient uptake (Fe in leaves; Mg in taproots; Ca, Zn, K in roots). Conversely, sugar and starch contents were negatively affected, compromising the nutritional quality (Wang et al., 2021b).”

References included:

Wang Y., Deng C., Cota-Ruiz K., Tan W., Reyes A., Peralta-Videa J.R., Hernandez-Viezcas J.A., Li C., Gardea-Torresdey J.L. Effects of different surface-coated nTiO2 on full-grown carrot plants: Impacts on root splitting, essential elements, and Ti uptake. J Haz Mater, 2021a, 402, 123768.

Wang Y., Deng C., Cota-Ruiz K., Peralta-Videa J.R., Hernandez-Viezcas J.A., Gardea-Torresdey J.L. Soil-aged nano titanium dioxide effects on full-grown carrot: Dose and surface-coating dependent improvements on growth and nutrient quality. Scie Tot Environ, 2021b, 774, 145699.

L395-398 Please add more recent works regarding the nCuO-plant interactions. Please check:
[Ref]
[Ref](in planta biodistribution of nCuO in the particle form and growth related gene expression)

The references indicated have been included and discussed.

Lines 452-464: “The grain of weedy and cultivated rice were differentially impacted by nCuO, bulk or ionic forms, showing also a cultivar-specific and concentration-dependent response. Cu translocation directly influenced plant yield, sugar production, starch content, protein content, and expression of auxin associated genes in grain (Deng et al., 2022b). Analyzing the effect of citric acid (CA) coated copper oxide (CA-nCuO) and its application (foliar spray or soil exposure) on the growth and physiology of soybean (*Glycine max* L.), nCuO appeared to be more accessible for plant uptake, as compared to CA-nCuO, decreasing the protein content, and inhibiting plant growth. CA reduced CuO NPs toxicity, demonstrating that surface modification may change the toxic properties of NPs (Deng et al., 2022c).
Treatment of *Lactuca sativa* L. with nCuO significantly increased biomass as compared to CuO microparticles (Wang et al., 2019). In addition, plants can benefit from nCuO treatment through enhanced defensive pathways, and through direct antimicrobial and antifungal activities (Elmer et al., 2018).”

References included:

Deng C., Wang Y., Navarro G., Sun Y., Cota-Ruiz K., Hernandez-Viezcas J.A., Niu G., Li C., White J.C., Gardea-Torresdey J. 2022b. Copper oxide (CuO) nanoparticles affect yield, nutritional quality, and auxin associated gene expression in weedy and cultivated rice (Oryza sativa L.) grains, Scie Tot Environ, 810, 152260.

Deng C., Wang Y., Cantu J.M., Valdes C., Navarro G., Cota-Ruiz K., Hernandez-Viezcas J.A., Li C., Elmer W.H., Dimkpa C.O., White J.C., Gardea-Torresdey, J.L. 2022c. Soil and foliar exposure of soybean (Glycine max) to Cu: Nanoparticle coating-dependent plant responses, NanoImpact, 26,100406.

Reviewer #2:

1. Please rewrite highlights 1 and 3. The highlight should point out the most critical findings, conclusions, or perspectives in this review.

Highlights have been modified in order to be more representative of the review text:

- Biotransformation is a fundamental phenomenon for understanding ENM-organism response mechanisms
- Synchrotron-based methodological analyses are critical for investigating ENM biotransformation
- Biotransformation of ENMs may have positive or negative effects when considering the agri-food application

2. Half of the text in this review are talking about the synchrotron-based analyses of ENM treated plant samples. However, it was not mentioned in the title, and the abstract only mentioned it once of its "increased use".

We thank Rev2 for the suggestions. Synchrotron-based techniques are becoming more important to comprehend the real physico-chemical forms of ENMs within plants tissues and organs and can give the missing information that we do not have from the physiological and molecular analyses, as suggested by the relevance of some of the most influential publications on this topic cited in the text (Castillo et al., 2017; Hameed et al., 2022). However, synchrotron-based techniques are not the main focus of the review. The mechanism of biotransformation behind the plant response to ENMs is the fundamental point. Synchrotron based techniques are certainly instrumental for shedding light on those mechanisms and the combination of results from physical analyses with physiological and molecular observations can give a more comprehensive picture of what happens during ENMs treatment *in planta*. We are aware of the relevance of Synchrotron based techniques and we decided to give them an appropriate space in the introduction, in the (new) paragraph 1.2.

For these reasons we believe that title represents our work in the proper manner, and we would like to maintain it in the present form, where the emphasis is more on the mechanisms, while the techniques are tools to clarify those mechanisms.

The abstract, on the other hand, has been modified on order to be more informative on the points discussed in the main text:

“Research on engineered nanomaterials (ENMs) exposure has continued to expand rapidly, with a focus on uncovering the underlying mechanisms. The EU largely limits the number and the type of organisms that can be used for experimental testing through the 3R normative. There are different routes through which ENMs can enter the soil-plant system: this includes the agricultural application of sewage sludges, and the distribution of nano-enabled agrochemicals. However, a thorough understanding of the physiological and molecular implications of ENMs dispersion and chronic low-dose exposure remains elusive, thus requiring new evidence and a more mechanistic overview of pathways and major effectors involved in plants. Plants can offer a reliable alternative to conventional model systems to elucidate the concept of ENM biotransformation within tissues and organs, as a crucial step in understanding the mechanisms of ENM-organism interaction. To facilitate the understanding of the physico-chemical forms involved in plant response, synchrotron-based techniques have added new potential perspectives in studying the interactions between ENMs and biota. These techniques are providing new insights on the interactions between ENMs and biomolecules. The present review discusses the principal outcomes for ENMs after intake by plants, including possible routes of biotransformation which make their final fate less uncertain, and therefore require further investigation.”

3. The whole introduction (from L41-L96) is talking about the reported environmental exposure of ENM and the effects of quantum dots on plant growth. Please revise this part and be more focused on your main topic. This review aims to summarize the synchrotron-based analysis of the ENM biotransformation in plants and some molecular effects.

We thank Rev2 for the comment. Introduction has been modified in order to be more topic oriented.

Lines 47-99: “Although global food production has generally increased over time, the distribution has been far from equitable, with more than 820 million people having insufficient food and many more consuming low-quality diets leading directly to micronutrient deficiencies (Willett et al 2019; Zhong et al., 2020). In the past 20 years, and particularly in the past decade, engineered nanomaterials (ENMs) have seen dramatically increasing use and had an equally significant impact on ecosystems services and human society. As such, studies focused on the implications associated with their use are critical. In fact, it is known that ENMs exert important, but not completely understood, effects on biota; a particular topic of concern include the effect on crops, food production, and trophic transfer (Gardea-Torresdey et al., 2014; Ma et al., 2018; White et al., 2022).
The interplay between plant growth, dissolution, evaporation, and aggregation are key aspects of the dynamic behavior of ENMs in the environment. Directional aggregation can result in the formation of larger particles with a more complex morphology. However, given the complexity of natural environments, most nanomaterials can be found in hetero-aggregated composites of different inorganic and organic materials (Judy et al., 2012; Ma et al 2018). These aggregates can be very different from original simple pristine morphologies and may even form highly branched structures similar to fractals, all of which subsequently dramatically affect their reactivity and transport (Ma et al., 2018; Huangfu et al., 2019).
Sectors with a large nanomaterial application such as medicine and food production may experience greater risks of ENMs exposure due to their uses, with thousands of tons of ENMs that are eventually discarded into the three main environmental matrices: soil, water, and air (Keller et al., 2013; Zuverza Mena et al., 2017). ENMs with the greatest historical use include nanoscale ceria (nCeO2), silica (nSiO2), titania (nTiO2), as well as nanoscale copper oxide (nCuO), zinc oxide (nZnO) and nanosilver (nAg), and as such, release in the environment has been investigated (Keller & Lazareva, 2014; Mitrano et al., 2015). Considering the long-time span of use of select materials (1950 to 2050),

efforts to estimate ENMs release through commercial and associated activity into the environment have been undertaken. For example, for nSiO2, a global production between 100,000 and three million tons per year has been estimated, while for $nCeO_2$, levels likely reach the upper limit of 10,000 tons per year, and for nAg, the literature reflects a production volume below 1,000 tons per year (Giese et al., 2018). The use of nTiO2 for the inhibition of microbial proliferation in food is one of the most important ways to prolong the shelf life of packaged products (Abutalib & Rajeh., 2020). However, a panel from EFSA concluded that E171 (TiO2) can no longer be considered as safe when used as a food additive (EFSA Journal 2021).
Gottschalk et al., (2009) calculated environmental concentrations using a probabilistic LCA (life cycle analysis) of ENM containing products. The authors modelled nTiO2, nZnO, nAg, carbon nanotubes (CNT), and fullerenes for the U.S., Europe, and Switzerland. The concentrations in the environment were calculated through probabilistic density functions and compared to ecotoxicology data. In the simulations, the values ranged from 0.003 ng L-1 (fullerenes) to 21 ng L-1 (nTiO2) for surface waters and from 4 ng L-1 for fullerenes to 4 µg L-1 for nTiO2 for sewage treatment effluents. In Europe and the U.S., ENMs increased annually in sludge treated soil, and ranged from 1 ng kg-1 for fullerenes to 89 µg kg-1 for nTiO2 (Gottschalk et al. 2009; Keller et al., 2013; Keller & Lazareva, 2014; Rincon, 2019).
Importantly, quantum dots (QDs), as well as many carbon- and metal-based ENMs, have been shown to produce negative effects on animals and plants as a function of dose, including accumulation, alteration of physiological and biochemical parameters, and reduced growth or yield (Oh et al., 2016; Zuverza-Mena et al., 2017). Quantum dots have shown to enter plant roots and to damage the cell wall, dysregulating metabolism (Marmiroli et al., 2020). While mercaptoacetic acid (MAA)-coated CdSe/ZnS QDs induced minimal toxicity on maize seedlings, pristine cadmium/tellurium (Cd/Te) QDs induced chromatin stress, mitochondrial damage and inhibition on green gram sprouts (*Phaseolus radiatus* L.) growth (Song et al., 2013). There are several routes by which ENM can enter the soil-plant system. These include agricultural application of sewage sludges which often contain nSiO2, nTiO2, nZnO, and nAg; as well as the application of nano-enabled agrochemicals, resulting in the direct entry of nSiO2, nTiO2, nZnO, nFeOx, nCuO, CeO2 and nAg into agricultural soils (Lv et al., 2019; Verma et al., 2022)."

Additional references included:

Gardea-Torresdey J.L., Rico C.M., White J.C. Trophic transfer, transformation, and impact of engineered nanomaterials in terrestrial environments. Environ. Sci. Technol. 2014, 48, 2526−2540.

Keller A.A., McFerran S., Lazareva A., Suh S. 2013. Global life cycle releases of engineered nanomaterials. J. Nanopart. Res. 15, 1692−1709.

Keller A.A., Lazareva A. Predicted Releases of Engineered Nanomaterials: From Global to Regional to Local. Environ. Sci. Technol. Lett. 2014, 1, 1, 65–70.

Mitrano D.M., Motellier S., Clavaguera S., Nowack B. Review of nanomaterial aging and transformations through the life cycle of nano-enhanced products, Environment International, 2015, 77, 132-147.

Rincon A.M. 2019. Chapter 6 - Presence of nanomaterials on consumer products: food, cosmetics, and drugs. pp. 165-181. Marmiroli N., White J.C., Song J., Eds: In Micro and Nano Technologies, Exposure to Engineered Nanomaterials in the Environment, Elsevier, Amsterdam, The Netherlands.

Song U., Jun H., Waldman B., Roh J., Kim Y., Yi J., Lee E.J. Functional analyses of nanoparticle toxicity: a comparative study of the effects of TiO2 and Ag on tomatoes (Lycopersicon esculentum) Ecotoxicol. Environ. Saf., 2013. 93, 60-67.

White J.C., Zuverza-Mena N., Elmer W.H. From nanotoxicology to nano-enabled agriculture: Following the science at the Connecticut Agricultural Experiment Station (CAES). Plant Nano Biology, 2022, 1, 100007. Doi: 10.1016/j.plana.2022.100007.

4. L66 Please add more appropriate citations. Can you provide any related numbers?

New references have been added in order to give more quantitative information:

Lines 64-70: "Sectors with a large nanomaterial application such as medicine and food production may experience greater risks of ENMs exposure due to their uses, with thousands of tons of ENMs that are eventually discarded into the three main environmental matrices: soil, water, and air (Keller et al., 2013; Zuverza Mena et al., 2017). ENMs with the greatest historical use include nanoscale ceria (nCeO2), silica (nSiO2), titania (nTiO2), as well as nanoscale copper oxide (nCuO), zinc oxide (nZnO) and nanosilver (nAg), and as such, release in the environment has been investigated (Keller & Lazareva, 2014; Mitrano et al., 2015)."

New references included:

Keller A.A., McFerran S., Lazareva A., Suh S. 2013. Global life cycle releases of engineered nanomaterials. J. Nanopart. Res. 15, 1692−1709.

Keller A.A., Lazareva A. Predicted Releases of Engineered Nanomaterials: From Global to Regional to Local. Environ. Sci. Technol. Lett. 2014, 1, 1, 65–70.

Mitrano D.M., Motellier S., Clavaguera S., Nowack B. Review of nanomaterial aging and transformations through the life cycle of nano-enhanced products, Environment International, 2015, 77, 132-147.

5. L67 and L78 Please define nSiO2, nAg, nZnO, and so forth.

We thank Rev2 for the comment. We included the definition of each ENM cited:

Lines 67-70: "ENMs with the greatest historical use include nanoscale ceria (nCeO2), silica (nSiO2), titania (nTiO2), as well as nanoscale copper oxide (nCuO), zinc oxide (nZnO) and nanosilver (nAg), and as such, release in the environment has been investigated (Keller & Lazareva, 2014; Mitrano et al., 2015)."

6. L71 Please add a citation.

The sentence has been fixed in order to give the proper citation.

Lines 72-75: “For example, for nSiO2, a global production between 100,000 and three million tons per year has been estimated, while for $nCeO_2$, levels likely reach the upper limit of 10,000 tons per year, and for nAg, the literature reflects a production volume below 1,000 tons per year (Giese et al., 2018).”

7. L73 TiO2 or nanoscale TiO2?

The typo has been fixed.

8. You only have one subsection "1.1" in part 1. Please consider merging it into part 1. Or change it to 1.2, and put all the content before it into 1.1.

Paragraph subdivision has been updated, including an initial subsection called “1. Engineered nanomaterial (ENM) biotransformation”. The first section is now “1.1. ENMs: from exposure to biotransformation”, while the previous section 1.1 is now shifted to 1.2.

9. L101-105 Please check
[Ref]
[Ref] for factors and mechanisms of the NPs biotransformation, especially the effect of soil weathering on plant responses.

We thank Rev2 for the suggestions. The text has been updated, as reported:

Lines 102-121: “Environmental and soil physico-chemical characteristics may significantly impact on ENMs aggregation, and dissolution, which may modify ENM bioavailability, uptake, translocation, and accumulation into terrestrial plants. In fact, light and temperature may induce potential changes on the ENM structure, such as during foliar spray (Hong et al., 2021). Once within plant tissues, ENM biotransformation may alter particle stability and behaviour in terms of interactions with biomolecules, triggering differential plant defense mechanisms (Ma et al., 2018; Rawat et al., 2018). ENMs are subject to a range of processes that may lead to their partial dissolution or result in structural modifications (Milosevic et al., 2020; Marmiroli et al., 2020). A schematic representation is reported in Figure 1. Nanoparticle biotransformation is a highly complex and poorly understood series of events and has been shown to occur during weathering in the soil, trophic transfer, and translocation within plant tissues. These reactions are highly dynamic and alter the original pristine structure of the nanoparticles in a number of ways, potentially causing the release of ions, but also the consequent restructuring (or destructuring) of the nanoparticle (Servin et al., 2017a). Biotransformation of nanomaterials may rest on the interaction with biological molecules that stabilize their external reactivity, such as peptides including those involved in detoxification, (*e.g.* glutathione), fatty acids, secondary metabolites, and even components of cell membranes (Marmiroli et al., 2020). Particle properties such as size, stability, charge, and dissolution may strongly influence other biotransformation mechanisms, potentially promoting enzymatic modification and functionalization with proteins (e.g., corona protein) present in the cytoplasm and organelles (Ma et al., 2018; Marmiroli et al., 2020).”

A new reference has been included, as well as an additional Figure (new Figure 1):

Hong J., Wang C., Wagner D.C., Gardea-Torresdey J.L., He F., Rico C.M. 2021. Foliar application of nanoparticles: mechanisms of absorption, transfer, and multiple impacts. Environ. Sci.: Nano, 8, 1196-1210.

Rawat S., Pullagurala V.L.R., Adisa I.O., Wang Y., Peralta-Videa J.R., Gardea-Torresdey J.L. Factors affecting fate and transport of engineered nanomaterials in terrestrial environments, COESH, 2018, 6, 47-53.

The suggested reference related to "Soil-aged nano titanium dioxide effects on full-grown carrot" has been included in the main text in the case studies reported in the paragraph 2.2 as Wang et al., 2021b.

10. L110-113 Besides the listed possibilities, ENMs can also remain as nanoscale particles with/without the loss of surface coatings in plant tissues after being uptaken. Please check [ref]

We thank Rev 2 for the suggestion. The reference has been cited, as reported.

Lines 121-124: "ENMs may maintain crystal structure when internalized by cells or may be disassembled and converted into less complex structures (by biological modification or chelation), thus reducing toxicity, and the risk of their accumulation and translocation (Wang et al., 2022)."

11. L178-181 Add more latest references. Please check
[ref]
[ref]

We thank Rev2 for the suggestions. The text has been updated, as reported:

Lines 196-199: "Studies have added significant molecular data on the effects of ENMs exposure in plants (Schwab et al., 2016; Ma et al., 2018). Different results are often observed for the same element as a function of its form or size, i.e. nanostructured, bulk, or ionic species (Pagano et al., 2016; Wang et al., 2022)."

The suggested reference related to "Copper oxide (CuO) nanoparticles affect yield, nutritional quality, and auxin associated gene expression in weedy and cultivated rice" has been included in the text in the case studies reported in the paragraph 2.6 as Deng et al., 2022b.

12. L202 Can you briefly describe Table 1? What is Table 1 for and why are genes listed? Were they significantly affected by the ENM exposure? All the citations listed in Table 1 are related to the author themselves. Please include some works from the others.

Genes reported in Figure 2 (former Figure 1) and Table 1 are some of those that are modulated by the different type of ENMs as reported in the cited studies. Other genes also resulted responsiveness in a ENM-specific manner during exposure and are considered for this reason as potential biomarker of exposure/effect. Moreover, these specific biomarkers are also able to testify how the modulation of the genes in the different organs is in some cases convergent between differential forms (nano, bulk, ion) of the same element. Considering that the concept of nano-specific biomarker has been introduced in some of our research groups papers, we thought to include these references in the Table

1. This was not the case of Table 2, in which papers not related to our research group on the principal evidence of the ENM biotransformation in plant observed by physiological, molecular and synchrotron-based analyses have been included.

Table 1 description has been improved as requested:

"Table 1. Genes as potential biomarkers of exposure/effect observed in roots, leaves and pollen, in different plant species (reported in Figure 2). Genes reported cannot be considered only as modulated in the different plant organs by the different type of ENMs, but also they showed a nano-specificity during the ENM response. It is also important to observe how, depending on the ENM type, biotransformation, and as indirect consequence, the transcriptomic response, can be convergent between different forms (nano, bulk, ion) of the same element (see Figure 2)."

13. L396 According to your reference, "nanofertilizer" should be "nanofungicide or nanofertilizer" Please consider to add more recently works
[ref]

The manuscript has been modified and the citation has been included:

Lines 423-424: "Copper oxide nanomaterials (nCuO) are among the most utilized ENMs with plants, including use as a nanopesticide or nanofertilizer (Elmer et al., 2018; Lowry et al., 2019; Xu et al., 2022)."

New reference included:

Xu T., Wang Y., Aytac Z., Zuverza-Mena N., Zhao Z., Hu X., Ng K.W., White J.C., Demokritou P. Enhancing Agrichemical Delivery and Plant Development with Biopolymer-Based Stimuli Responsive Core–Shell Nanostructures. ACS Nano 2022, 16, 4, 6034–6048.

14. L499-500 What kinds of "physical evidence" were obtained through synchrotron-based techniques? What is missing in the current studies?

The sentence has been improved in order to clarify those physical evidence that can be retrieved through synchrotron-based techniques:

Lines 536-541: "Integration of the information from physiological and molecular analyses with physical evidence (e.g., types and number of atoms surrounding the ENM, radial distance between atoms of the interactors and atoms constituting the ENM; ENM crystal structure) obtained through high energy X-ray spectroscopy platforms such as synchrotron-based techniques will enable a more realistic, mechanistic, and systems-level picture of plant response to ENM exposure."

15. Figure: Only one figure was provided in the main text regarding the list of genes being affected by the ENMs. But the main focus of this review is not ENMs affected gene expressions. What happens with ENMs biotransformation and synchrotron analysis?

We thank Rev2 for the comment. We decided to include a new Figure 1, described in the new paragraph 1.2, which schematized the major modifications that may occur during ENMs-soil-plant

interaction. In order to maximize the comprehension of the new Figure 1, a new caption was constructed to explain in details of these modifications and their practical effects during each phase (soil, foliar surface, plant).

New Figure 1 caption:

"Figure 1. Schematic representation of principal effects emerging after biotransformation of ENMs in soil, on foliar surface and within the plant tissues. ENMs in soil, due to particle and soil physico-chemical interactions, may remain unmodified, or may undergo to potential dissolution (with ions release), or undergo homo-/hetero-aggregation, which may highly influence particle stability and potential bioavailability (and consequently their uptake). On the foliar surface, temperature and light may also affect particle stability before uptake into the leaf tissues. Once within the plant, ENMs pristine, or modified, can interact with several biomolecule types (peptides, sugars, lipids, nucleic acids, secondary metabolites) leading to phenomena such as coating, enzymatic degradation, chelation or functionalization, which may influence the biotransformed particle at level of translocation, storage or reactivity. These parameters may also influence the interaction within the plant cell, triggering differential responses (*e.g.*, toxicity, oxidative stress, ROS production), which may be indirectly measured by physiological and molecular assays, but directly observed through physical strategies, including synchrotron-based methods."

Highlights

- Biotransformation is a fundamental phenomenon for understanding ENM-organism response mechanisms
- Synchrotron-based methodological analyses are critical for investigating ENM biotransformation
- Biotransformation of ENMs may have positive or negative effects when considering the agri-food application

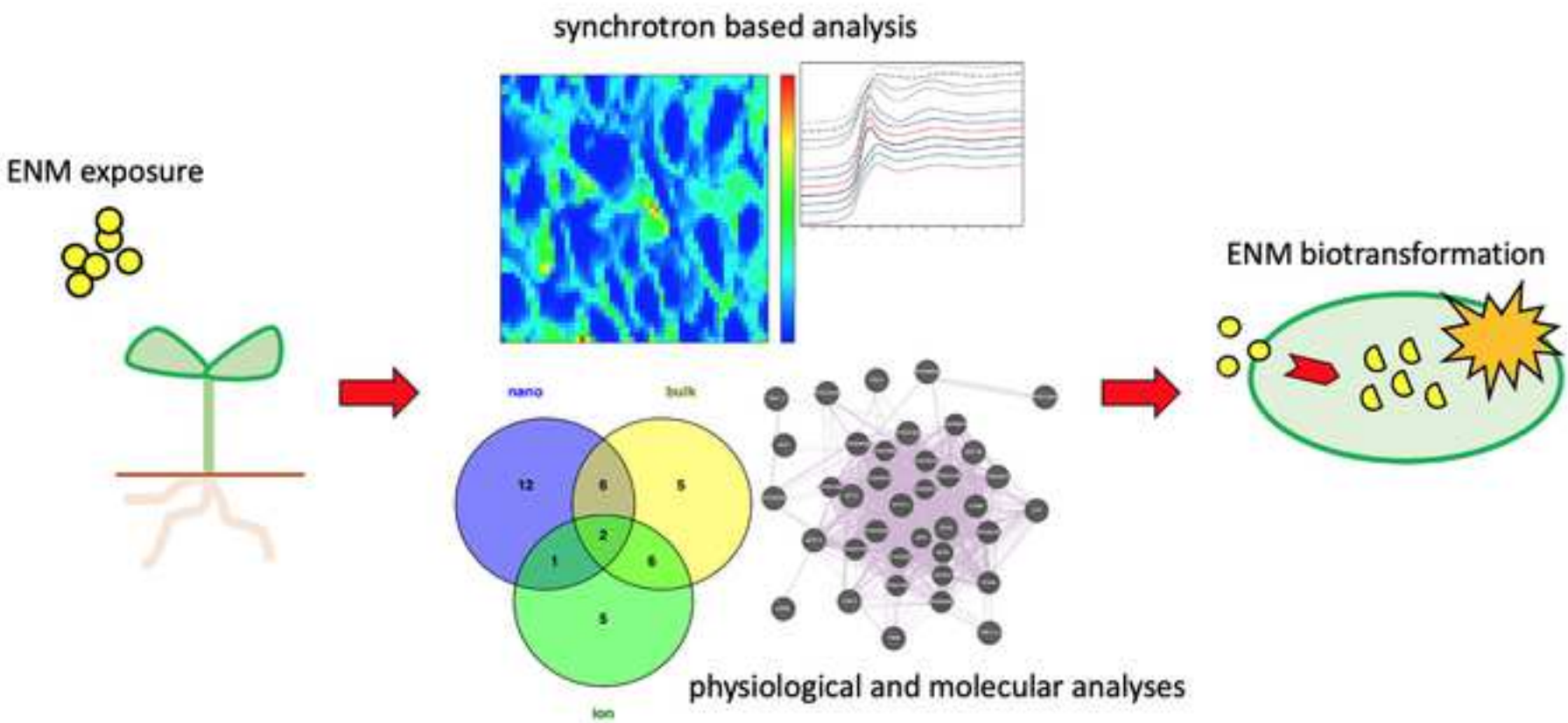

Figure 1

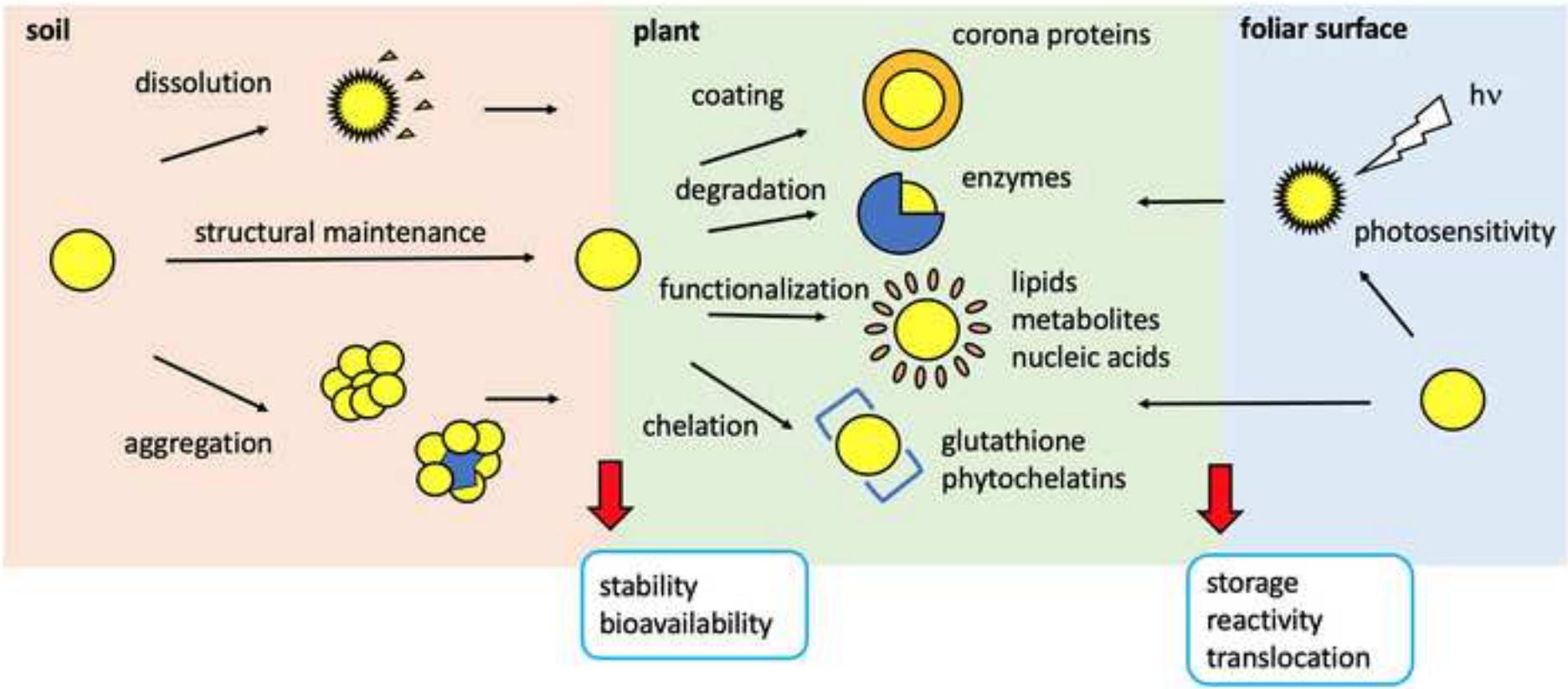

Figure 2

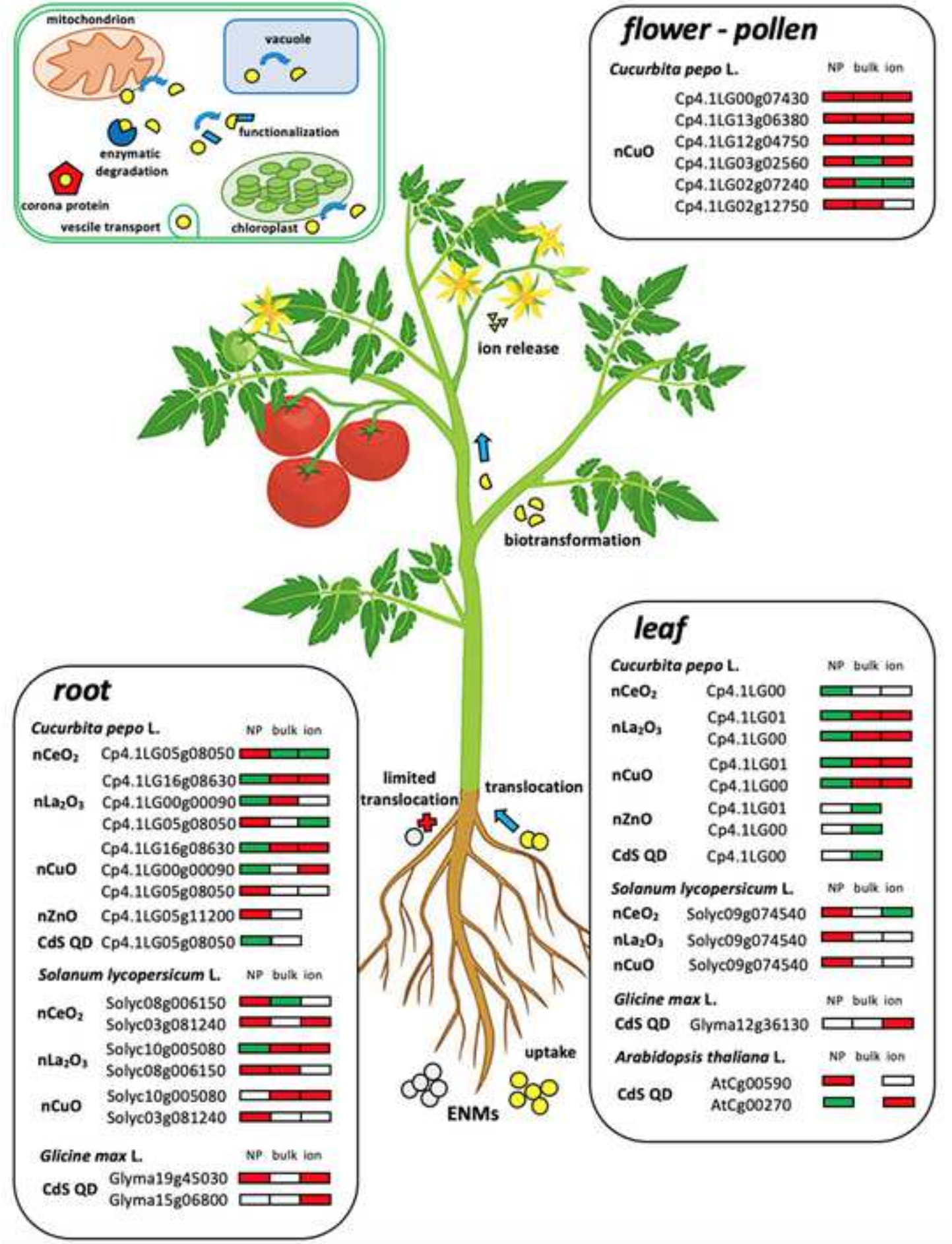

Declaration of interests

☐The authors declare that they have no known competing financial interests or personal relationships that could have appeared to influence the work reported in this paper.

☒The authors declare the following financial interests/personal relationships which may be considered as potential competing interests:

Nelson Marmiroli reports financial support was provided by European Union.

Conceptualization: LP, MM; original draft preparation: LP, MM, RR; review and editing: JCW, NM. All authors revised and agreed on the final version of the manuscript.

Nanomaterials biotransformation: In planta mechanisms of action

Luca Pagano,[1,*] Riccardo Rossi,[1,2] Jason C. White,[3] Nelson Marmiroli,[1,4] Marta Marmiroli[1,5*]

[1], Department of Chemistry, Life Sciences and Environmental Sustainability, University of Parma, 43124 Parma, Italy.

[2], Centro Interdipartimentale per l'Energia e l'Ambiente (CIDEA), University of Parma, 43124 Parma, Italy.

[3], The Connecticut Agricultural Experiment Station, New Haven, Connecticut 06504, United States.

[4], Consorzio Interuniversitario Nazionale per le Scienze Ambientali (CINSA), University of Parma, 43124 Parma, Italy.

[5], Interdepartmental Centre for Food Safety, Technologies and Innovation for Agri-food (SITEIA.PARMA), 43124 Parma, Italy.

*, corresponding author~~s~~: ~~luca.pagano@unipr.it;~~ marta.marmiroli@unipr.it.

Abstract

Research on engineered nanomaterials (ENMs) exposure has continued to expand rapidly, with a focus on uncovering the underlying mechanisms. The EU largely limits the number and the type of organisms that can be used for experimental testing through the 3R normative. There are different routes through which ENMs can enter the soil-plant system: this includes the agricultural application of sewage sludges, and the distribution of nano-enabled agrochemicals. However, a thorough understanding of the physiological and molecular implications of ENMs dispersion and chronic low-dose exposure remains elusive, thus requiring new evidence and a more mechanistic overview of pathways and major effectors involved in plants. Plants can offer a reliable alternative to conventional model systems to elucidate the concept of ENM biotransformation within tissues and organs, as a crucial step in understanding the mechanisms of ENM-organism interaction. To facilitate the

understanding of the physico-chemical forms involved in plant response, synchrotron-based techniques have added new potential perspectives in studying the interactions between ENMs and biota. These techniques are providing new insights on the interactions between ENMs and biomolecules. The present review discusses the principal outcomes for ENMs after intake by plants, including possible routes of biotransformation which make their final fate less uncertain, and therefore require further investigation~~Research on engineered nanomaterials (ENMs) exposure has continued to expand rapidly, and with studies focused on uncovering underlying mechanisms are concerned, EU largely limits the number and the type of organisms that can be used so as to support the 3R normative. There are different routes by which ENMs can enter the soil-plant system: this includes the agricultural application of sewage sludges, and the application of nano-enabled agrochemicals, resulting in the direct entry of ENMs into agricultural soil. However, a thorough understanding of the physiological and molecular implications of chronic low-dose exposure to engineered nanomaterials remains elusive. Plants can offer a reliable alternative and, in this context, the concept of nanomaterial biotransformation within plant tissues and organs is one of increasing interest. To facilitate understanding of the physico-chemical forms involved in plant respond, synchrotron-based techniques have seen increasing use and have added new perspectives on the interactions between ENMs and biota. The review will discuss the principal outcomes related to the ENMs biotransformation in plants and the practical relevance of those findings, as well as the potential applicability of those findings to other biotic species~~.

Keywords: biotransformation, plant, nanomaterials, synchrotron-based analyses, molecular response

Highlights

- Biotransformation is a fundamental phenomenon for understanding ENM-organism response mechanisms

- Synchrotron-based methodological analyses are critical for investigating ENM biotransformation
- Biotransformation of ENMs may have positive or negative effects when considering the agri-food application
- ~~Biotransformation is fundamental to understanding ENM-organism response~~
- ~~Synchrotron-based analyses are critical to investigate ENM biotransformation~~
- ~~Understanding ENM biotransformation is critical to safer by design applications~~

1. Engineered nanomaterial (ENM) biotransformation

~~*From ENM exposure to biotransformation*~~ *ENMs: from ~~From ENM exposure to~~ biotransformation*

~~1.~~*1.1.*

~~More than three billion metric tons of crops are produced globally each year in the world, requiring 187 million metric tons of fertilizer, nearly 4 million tons of pesticides, 2.7 trillion cubic meters of water (about 70% of all freshwater consumptive use globally), and over two quadrillion British thermal units (BTU) of embodied energy (Lowry et al., 2019; Zhong et al., 2020). Although the benefits of the Green Revolution have enabled consumption of an average 2,884 kcal per capita per day in the WHO Countries, conventional agricultural practices are unsustainable, and have directly led to significant environmental damage (Willett et al., 2019). Although global food production of calories has generally kept pace with population growth, the distribution has been far from equitable, with more than 820 million people having insufficient food and many more consuming low-quality diets leading directly micronutrient deficiencies (Willett et al 2019). In the past 20 years, and particularly in the past decade, engineered nanomaterials (ENMs) have seen dramatically increasing use and have had equally significant impact on ecosystems and human society; as such, studies focused on the implications associated with that use are critical. In fact, it is known that nanomaterials~~

Formatted: List Paragraph, Indent: Left: 0", Hanging: 0.3", Outline numbered + Level: 1 + Numbering Style: 1, 2, 3, … + Start at: 1 + Alignment: Left + Aligned at: 0.25" + Indent at: 0.5"

Formatted: Font: (Default) Times New Roman, Bold

Formatted: Font: (Default) Times New Roman, Bold, Italic

Formatted: Normal, Numbered + Level: 2 + Numbering Style: a, b, c, … + Start at: 1 + Alignment: Left + Aligned at: 0.75" + Indent at: 1"

Formatted: Font: Italic

Formatted: Font: (Default) Times New Roman, Italic

Formatted: Font: (Default) Times New Roman, Bold, Italic

Formatted: Font: (Default) Times New Roman, Italic

Formatted: Outline numbered + Level: 2 + Numbering Style: 1, 2, 3, … + Start at: 1 + Alignment: Left + Aligned at: 0" + Indent at: 0.29"

~~exert important, but often poorly understood, impacts on biota; particular topics of concern include human health, agriculture and food production (Ma et al., 2018).~~

~~The interplay between growth, dissolution, evaporation, and aggregation are key aspects of the dynamic behavior of nanomaterials in the environment. Directional aggregation can result in the formation of larger particles with complex morphologies. However, given the complexity of natural environments, most nanomaterials are found in heteroaggregated composites of different inorganic and organic materials (Judy et al., 2012; Ma et al 2018). These aggregates can be very different from original simple pristine morphologies and may even form highly branched structures similar to fractals, all of which subsequently dramatically affects reactivity and transport properties (Ma et al., 2018; Huangfu et al., 2019).~~

~~Sectors with widespread nanomaterial application such as medicine and food production carry a greater risk of ENMs exposure, and associated with these uses is the thousands of tons of ENMs that are discarded into the three main environmental matrices of soil, water, and air (Zuverza Mena et al., 2017). The ENMs with the greatest historical use include nanoscale CeO_2 ($nCeO_2$), $nSiO_2$, and nAg, and as such, release in the environment has been investigated. Given the long time span of use of select materials (1950 to 2050), efforts to estimate ENMs release through commercial and associated activity into the environment have been undertaken. For example, for $nSiO_2$, global production between 100,000 and about three million tons per year has been estimated. For $nCeO_2$, levels likely reach the upper limit of 10,000 tons per year, and for nAg, the literature reflects a production volume below 1,000 tons per year (Giese et al., 2018). Use of TiO_2 for inhibition of microbial proliferation in food is one of the most important ways to prolong the shelf life of packaged products (Abutalib & Rajeh., 2020). In addition, a panel from EFSA concluded that E171 can no longer be considered as safe when used as a food additive (EFSA Journal 2021).~~

~~Gottschalk et al., (2009) calculated environmental concentrations using a probabilistic life cycle analysis of ENM-containing products. The authors modelled $nTiO_2$, nZnO, nAg, carbon nanotubes (CNT), and fullerenes for the U.S., Europe, and Switzerland. The concentrations in the environment~~

~~were calculated through probabilistic density functions and compared to ecotoxicology data. In the simulations, the values ranged from 0.003 ng L^{-1} (fullerenes) to 21 ng L^{-1} ($nTiO_2$) for surface waters and from 4 ng L^{-1} for fullerenes, to 4 µg L^{-1} for $nTiO_2$ for sewage treatment effluents. In Europe and the U.S., ENMs increased annually in sludge treated soil, and ranged from 1 ng kg^{-1} for fullerenes to 89 µg kg^{-1} for $nTiO_2$ (Gottschalk et al. 2009).~~

~~Importantly, quantum dots (QDs), as well as many carbon- and metal-based ENMs have been shown to produce negative effects on animals and plants as a function of dose, including accumulation, alteration of physiological and biochemical traits, and reduced growth or yield (Oh et al., 2016; Zuverza-Mena et al., 2017). Quantum dots have been shown to enter plant roots and to damage the cell wall and dysregulate metabolism (Marmiroli et al 2020). While mercaptoacetic acid (MAA)-coated CdSe/ZnS QDs induced minimal toxicity on maize seedlings, pristine cadmium/tellurium (Cd/Te) QDs induced chromatin stress, mitochondrial damage and inhibition in green gram sprouts (*Phaseolus radiatus* L.) growth (Zuverza-Mena et al., 2017). There are several routes by which ENM can enter the soil-plant system. This includes the agricultural application of sewage sludges which often contain $nSiO_2$, $nTiO_2$, nZnO, and nAg; as well as the application of nano-enabled agrochemicals,~~ Although global food production has generally increased over time, the distribution has been far from equitable, with more than 820 million people having insufficient food and many more consuming low-quality diets leading directly to micronutrient deficiencies (Willett et al 2019; Zhong et al., 2020). In the past 20 years, and particularly in the past decade, engineered nanomaterials (ENMs) have seen dramatically increasing use and had an equally significant impact on ecosystems services and human society. As such, studies focused on the implications associated with their use are critical. In fact, it is known that ENMs exert important, but not completely understood, effects on biota; a particular topic of concern include the effect on crops, food production, and trophic transfer (Gardea-Torresdey et al., 2014; Ma et al., 2018; White et al., 2022).

The interplay between plant growth, dissolution, evaporation, and aggregation are key aspects of the dynamic behavior of ENMs in the environment. Directional aggregation can result in the formation

Formatted: Highlight

of larger particles with a more complex morphology. However, given the complexity of natural environments, most nanomaterials can be found in hetero-aggregated composites of different inorganic and organic materials (Judy et al., 2012; Ma et al 2018). These aggregates can be very different from original simple pristine morphologies and may even form highly branched structures similar to fractals, all of which subsequently dramatically affect their reactivity and transport (Ma et al., 2018; Huangfu et al., 2019).

Sectors with a large nanomaterial application such as medicine and food production may experience greater risks of ENMs exposure due to their uses, with thousands of tons of ENMs that are eventually discarded into the three main environmental matrices: soil, water, and air (Keller et al., 2013; Zuverza-Mena et al., 2017). ENMs with the greatest historical use include nanoscale ceria ($nCeO_2$), silica ($nSiO_2$), titania ($nTiO_2$), as well as nanoscale copper oxide (nCuO), zinc oxide (nZnO) and nanosilver (nAg), and as such, release in the environment has been investigated (Keller & Lazareva, 2014; Mitrano et al., 2015). Considering the long-time span of use of select materials (1950 to 2050), efforts to estimate ENMs release through commercial and associated activity into the environment have been undertaken. For example, for $nSiO_2$, a global production between 100,000 and three million tons per year has been estimated, while for $nCeO_2$, levels likely reach the upper limit of 10,000 tons per year, and for nAg, the literature reflects a production volume below 1,000 tons per year (Giese et al., 2018). The use of $nTiO_2$ for the inhibition of microbial proliferation in food is one of the most important ways to prolong the shelf life of packaged products (Abutalib & Rajeh., 2020). However, a panel from EFSA concluded that E171 (TiO_2) can no longer be considered as safe when used as a food additive (EFSA Journal 2021).

Gottschalk et al., (2009) calculated environmental concentrations using a probabilistic LCA (life cycle analysis) of ENM containing products. The authors modelled $nTiO_2$, nZnO, nAg, carbon nanotubes (CNT), and fullerenes for the U.S., Europe, and Switzerland. The concentrations in the environment were calculated through probabilistic density functions and compared to ecotoxicology data. In the simulations, the values ranged from 0.003 ng L^{-1} (fullerenes) to 21 ng L^{-1} ($nTiO_2$) for

Formatted: Subscript
Formatted: Subscript
Formatted: Subscript
Formatted: Subscript
Formatted: Subscript
Formatted: Subscript
Formatted: Subscript
Formatted: Subscript
Formatted: Superscript
Formatted: Superscript
Formatted: Subscript

surface waters and from 4 ng L^{-1} for fullerenes to 4 µg L^{-1} for $nTiO_2$ for sewage treatment effluents. In Europe and the U.S., ENMs increased annually in sludge treated soil, and ranged from 1 ng kg^{-1} for fullerenes to 89 µg kg^{-1} for $nTiO_2$ (Gottschalk et al. 2009; Keller et al., 2013; Keller & Lazareva, 2014; Rincon, 2019).

Importantly, quantum dots (QDs), as well as many carbon- and metal-based ENMs, have been shown to produce negative effects on animals and plants as a function of dose, including accumulation, alteration of physiological and biochemical parameters, and reduced growth or yield (Oh et al., 2016; Zuverza-Mena et al., 2017). Quantum dots have shown to enter plant roots and to damage the cell wall, dysregulating metabolism (Marmiroli et al., 2020). While mercaptoacetic acid (MAA)-coated CdSe/ZnS QDs induced minimal toxicity on maize seedlings, pristine cadmium/tellurium (Cd/Te) QDs induced chromatin stress, mitochondrial damage and inhibition on green gram sprouts (*Phaseolus radiatus* L.) growth (Song et al., 2013). There are several routes by which ENM can enter the soil-plant system. These include agricultural application of sewage sludges which often contain $nSiO_2$, $nTiO_2$, nZnO, and nAg; as well as the application of nano-enabled agrochemicals, resulting in the direct entry of $nSiO_2$, $nTiO_2$, nZnO, nFeOx, nCuO, CeO_2 and nAg into agricultural soils (Lv et al., 2019; Verma et al., 2022).

~~1.1.~~1.2. *Conceiving and studying the ENM biotransformation*

Environmental and soil physico-chemical characteristics may significantly impact on ENMs aggregation, and dissolution, which may modify ENM bioavailability, uptake, translocation, and accumulation into terrestrial plants. In fact, light and temperature may induce potential changes on the ENM structure, such as during foliar spray (Hong et al., 2021). Once within plant tissues, ENM biotransformation may alter particle stability and behaviour in terms of interactions with biomolecules, triggering differential plant defense mechanisms (Ma et al., 2018; Rawat et al., 2018). ENMs are subject to a range of processes that may lead to their partial dissolution or result in structural modifications (Milosevic et al., 2020; Marmiroli et al., 2020). A schematic representation

Formatted: Superscript
Formatted: Superscript
Formatted: Subscript
Formatted: Superscript
Formatted: Superscript
Formatted: Subscript
Formatted: Font: Italic
Formatted: Subscript
Formatted: Subscript
Formatted: Indent: Left: 0", Hanging: 0.3", Outline numbered + Level: 2 + Numbering Style: 1, 2, 3, … + Start at: 2 + Alignment: Left + Aligned at: 0.3" + Indent at: 0.55"

is reported in Figure 1.~~Once accumulated by plants, ENMs are subject to a range of processes that may induce partial dissolution or result in structural modifications (Milosevic et al., 2020; Marmiroli et al., 2020).~~ Nanoparticle biotransformation is a highly complex and poorly understood series of events and has been shown to occur during weathering in the soil, trophic transfer, and translocation within plant tissues. These reactions are highly dynamic and alter the original pristine structure of the nanoparticles in a number of ways, potentially causing the release of ions, but also the consequent restructuring (or destructuring) of the nanoparticle (Servin et al., 2017a). Biotransformation of nanomaterials may rest on the interaction with biological molecules that stabilize their external reactivity, such as peptides including those involved in detoxification, (*e.g.*, glutathione), fatty acids, secondary metabolites, and even components of cell membranes (Marmiroli et al., 2020). Particle properties such as size, stability, charge, and dissolution may strongly influence other biotransformation mechanisms, potentially promoting enzymatic modification and functionalization with proteins (*e.g.*, corona protein) present in the cytoplasm and organelles (Ma et al., 2018; Marmiroli et al., 2020). ENMs may maintain crystal structure when internalized by cells or may be disassembled and converted into less complex structures (by biological modification or chelation), thus reducing toxicity, and the risk of their accumulation and translocation (Wang et al., 2022). These post-uptake structural modifications involve specific parameters such as bond distance with other atoms or nature of the ligand atoms. In consideration of this, one objective in biotransformation studies is to investigate the physico-chemical forms (e.g., nanocrystal structure) within exposed tissues and to characterize the structural differences within the new biotransformed molecules, including identification of the biomolecules interacting with the ENMs (Castillo-Michel et al., 2017; Marmiroli et al., 2020). ~~Nanoparticle biotransformation is highly complex and poorly understood series of reactions and has been shown to occur during soil weathering, trophic transfer, translocation within plant tissues; these reactions are highly dynamic and alter the original pristine structure of the nanoparticles in a myriad of ways, potentially causing the release of ions but also the consequent restructuring (or destructuring) of the nanoparticle physico-chemical form (Servin et al., 2017a).~~

Formatted: Font: Italic

Formatted: Font: Italic

~~Biotransformation of nanomaterials may lead to the attachment of biological molecules that stabilize their external reactivity, such as proteins, fatty acids, secondary metabolites, and even cell membranes (Marmiroli et al., 2020). Particle properties such as size, stability, charge, and dissolution influence the biotransformation mechanisms, potentially promoting enzymatic modification and functionalization with proteins (*e.g.*, corona protein) present in the cytoplasm and organelles (Marmiroli et al., 2020). Importantly, ENMs may maintain crystal structure when internalized by cells or may be disassembled and transformed into less complex structures (by biological modification or chelation), thus minimizing toxicity and influencing the risk of their accumulation and translocation. These post-uptake structural modifications involve specific parameters such as bond distance with other atoms or nature of the ligand atoms. In consideration of this, one objective in biotransformation studies is to investigate the physico-chemical forms (*e.g.*, nanocrystal structure) within exposed tissues and to characterize the structural differences evident in the new biotransformed molecules, including identification of the key biomolecules interacting with the ENM (Castillo-Michel et al., 2017; Marmiroli et al., 2020).~~ It has furthermore to consider how genetic diversity across different plant species and within the same plant species (in different cultivars) may influence the ENM uptake and translocation (Deng et al., 2020).

Some of the more interesting discoveries on the biotransformation and localization of metal based-ENMs into plants have been achieved with to the synchrotron-based techniques of imaging, elemental speciation, and atomic neighbors' identification. This transformation will be also influenced by the environment, these reactions of the same particle will be different on the leaf surface, in the mesophyll, in the vascular tissue, in different organelles, in the roots and in the rhizosphere (Sarret et al. 2013; Castillo-Michel et al., 2017).

Micro-X-Ray Fluorescence (μ-XRF) and micro-X-Ray Adsorption Spectroscopy (μ-XAS) K-, L- or L_{III}-edge EXAFS and XANES spectra have be used to study the biotransformation of coated nanomaterials present in plants and soil (Lopez-Moreno et al., 2010; Judy et al., 2012). μ-XRF is used for qualitative elemental analysis of heterogeneous biological samples. The interaction of the

sample with high-energy X-ray radiation, which leads to X-ray absorption and emission of the fingerprint X-ray spectra for each element, is the key feature of this powerful analytical method. The absorption/excitation effect and relaxation process lead to atoms emitting fluorescence photons characterized by elemental specific energy (Chebakova et al., 2021). Extended X-ray absorption fine structure (EXAFS) is a technique that utilizes oscillations of the X-ray absorption coefficient on the high-energy side of an absorption edge. Such oscillations can reach up to 1000 eV above the edge and may have a magnitude of 10% or more. In addition, it is necessary to consider that atoms are not stationary. Thermal vibrations will obscure the EXAFS oscillations, and in the harmonic approximation, this can be accounted for by considering a Debye-Waller-type term. This led to a great improvement in the theoretical understanding of EXAFS and it is now established that a single scattering short-range order theory is adequate under most circumstances (Gurman, 1995). In addition, electrons that have undergone inelastic losses will not interference in the process. This is considered by an exponential damping term. It is the limited range of the photoelectrons in the energy region of interest 50-1000 eV that allows for a short-range order description of EXAFS also in crystalline materials (Gurman, 1995). The region which includes the pre-edge, edge-jump and post-edge to approximately 30-50 eV is referred to as the X-ray Absorption Near Edge Structure (XANES), which describes the structural component of the X-ray absorption near-edge as an extension of the EXAFS, largely due to the long mean free path of the photoelectron and the dominance of high order multiple scattering contributions (Gräfe et al., 2014).

Synchrotron-based techniques use photons, which do not have mass; therefore the factor 1.22 is substituted by the non-relativistic mass of the electron which is $m=5.485\cdot10^{-4}$ Da. This makes the resolution even smaller and increases penetration depth into the sample. On the other hand, EDX depends on the acceleration voltage of the particle or of the photon. Every element has its own orbital energies, and the acceleration voltage allows excitation one or more of these, independently if it comes from a TEM or from a synchrotron (Goldstein et al., 2003).

From the perspective of application, μ-XRF can provide information on the presence and localization of specific elements within tissues, while XANES and EXAFS spectroscopy can provide information related to the valence state and coordination environment of the element of interest, as well as the molecular species present in the sample. The use of μ-XRF and μ-XANES for the analysis of nanoparticles in plants have been thoroughly reviewed by Castillo-Michel et al. (2017).

Importantly, these powerful methodologies open the possibility to mechanistically address many important environmental issues, such as the chemical activities of environmental pollutants, to trace environmental elemental cycles, element speciation in complex matrices, and to characterize the natural/anthropogenic complex matrixes that are not amendable for standard analytical and structural analyses (Puri et al., 2019). In many synchrotrons around the world, there is increasing use of dedicated beamlines to study environmental and plant tissues exposed to contaminants such as ENMs (Proux et al., 2017; d'Acapito et al., 2019).

The~~is~~ present review aims to describe the current understanding of metal based-ENMs biotransformation mechanisms in ~~plants, and~~plants and focuses on correlating available physiological and molecular data with the information obtained by synchrotron-based techniques. This evaluation not only highlights biotransformation as one of the major driving forces mediating the biological effects of ENMs on plants, but also offers some perspective on intentional and safer-by-design strategies that can ensure more sustainable application of these materials. Moreover, the study on plants is instrumental to the application of the REACH normative within European Union for toxicological and ecotoxicological studies (Replacement, Reduction and Refinement). Plants are higher eukaryotes, characterized by large nuclear genomes and organellar genomic information (within chloroplasts and mitochondria) that provide an effective model for many complex species (Chang et al., 2016).

2. Physiological and molecular effects as indirect evidence of ENM biotransformation in plants

The physiological behaviour and related molecular pathways of response are important to characterizing and understanding ENM biotransformation. An important part of this involves comparing the effects of a nanomaterial with that of the bulk and ionic counterparts, as well as by investigating different exposure times and by exposing different plant organs and tissues (Schwab et al., 2016; Marmiroli et al., 2021). Studies have added significant molecular data on the effects of ENMs exposure in plants (Schwab et al., 2016; Ma et al., 2018). Different results are often observed for the same element as a function of its form or size, i.e. nanostructured, bulk, or ionic species (Pagano et al., 2016; Wang et al., 2022).~~A number of important studies have added significant molecular understanding to the effects of ENMs exposure in plants (Schwab et al., 2016; Ma et al., 2018). Different results are often observed for the same element as a function of form or size; *i.e.* nanostructured, bulk, or ionic species (Pagano et al., 2016).~~ Detailed study of differential transcriptional regulation, protein abundance or metabolomic profiling (Huang et al., 2018; Majumdar et al., 2019; Gallo et al., 2021) are critical to demonstrating the nano-specificity of plant response. The study of organellar genome stability and the related stoichiometric variations during ENM treatment has also provided important mechanistic insight into plant to ENM exposure (Pagano et al., 2022). Advanced synchrotron-based techniques may either help to systematically understand the nano-bio interactions, with regard to physical and chemical reactions at the biomolecular surface: biomolecules may interact with ENMs, generating biomolecular corona, which change the ENM surface properties, and interfere with its functionality/reactivity (Hameed et al., 2022).

Regarding the physiological effects of ENMs on plants of agronomic interest, these studies have provided a better understanding of the specific properties of the ENMs that may enable sustainable use in the agrifood sector. Beyond the potential adverse effects upon bioaccumulation from soil or other exposure routes, there is an increasing interest in exploiting the potential positive effects of ENMs on plants, aiming to improve crop yields and quality. A range of mechanisms, including direct use as nanofertilizers (Verma et al., 2022), nanocarriers (Karny et al., 2018), smart delivery systems

Formatted: Font: (Default) Times New Roman, Bold, Italic

Formatted: Indent: Left: 0", Hanging: 0.2", Outline numbered + Level: 1 + Numbering Style: 1, 2, 3, … + Start at: 1 + Alignment: Left + Aligned at: 0.25" + Indent at: 0.5"

(Xu et al., 2022) or when in association to plant growth-promoting bacteria, are considered (Prado de Moraes et al., 2021).~~Beyond the potential adverse effects upon accumulation from the soil or other exposure routes, there is increasing interest in exploring the potential positive effects of nanomaterials on plants, aiming to improve crop yields and productivity by a range of mechanisms, including direct use as nanofertilizers (Verma et al., 2022), nanocarriers (Karny et al., 2018), or when in association to plant growth-promoting bacteria (Prado de Moraes et al., 2021).~~ In addition, ENMs may act indirectly by protecting plants from biotic (*e.g.*, nanopesticides) or abiotic stressors (*e.g.*, wastewater and soil treatment) (Liu et al., 2015; Kah et al., 2018; Kumari et al., 2019). Due to the many variables involved, it is essential to obtain robust safety data regardless of the end use: ENM type, the modes and time of exposure, concentrations tested, and the plants used are all important considerations. Any recurring effects that occur under these different conditions are of particular interest and are explored below (see Figure 2~~1~~ and Table~~s~~ 1). Table 2 summarizes the major outcomes related to metal based-ENM biotransformation in plants, including the principal mechanisms involved, and the major physiological and molecular insights observed from exposure.

2.1. Lanthanides based ENMs

Cerium Oxide ($nCeO_2$) has shown significant potential for agricultural applications, largely due to its properties as an ROS scavenger (Ma et al., 2015; Servin et al., 2017b). While CeO_2 as a bulk crystal mainly consists of Ce(IV), the reduction to $nCeO_2$ significantly enhances the relative amount of Ce(III), resulting in a higher catalytic effects comparable to the capabilities of a biological antioxidant (Eriksson et al., 2018). Servin et al. (2017b) used μ-XRF and μ-XANES to analyze the interactions between $nCeO_2$ and different biochars in soil, observing that much of the Ce remained in $nCeO_2$ form within the plant tissues. The dissolution rate of the nanoform can increase in acidic environments to generate Ce(III), as reported by Hernandez-Viezcas et al. (2013) who analyzed in *Glycine max* L. the effects of $nCeO_2$ (1000 mg L^{-1}, 48d exposure). Results have been confirmed by Rui et al. (2015), who used XANES on exposed cucumber (*Cucumis sativus* L.) tissues (2000 mg L^{-1}, 21d exposure) to

Formatted: Outline numbered + Level: 2 + Numbering Style: 1, 2, 3, … + Start at: 1 + Alignment: Left + Aligned at: 0" + Indent at: 0.25"

Formatted: Font: (Default) Times New Roman, Italic

observe $nCeO_2$ association with phosphate. These properties highly impact not only reactivity but also $nCeO_2$ translocation. In zucchini (*Cucurbita pepo* L.), treated with 500 mg L^{-1} of $nCeO_2$, the nanoform is mainly present in the roots and stems, with limited translocation to the leaves (Pagano et al., 2016). However, co-contamination with other ENMs (*e.g.*, CdS QDs) under same experimental conditions resulted in increased translocation to the shoots from 1000 to 3000 mg kg^{-1} (Pagano et al., 2017). Similar results have been reported in several plant species: for example, Rossi et al (2017) $nCeO_2$ under co-exposure with ionic Cd in soybean (*Glycine max* L.) showed an altered (1-2 fold increased) translocation to the shoots. Interestingly, bulk CeO_2 translocation resulted similar to the nano-form, whereas ionic Ce was translocated in greater amounts to the shoots (Pagano et al., 2016). This analysis was supplemented with molecular data; the transcriptional profiles were evaluated in *C. pepo* and *S. lycopersicum* as a function of $nCeO_2$, nLa_2O_3 and nCuO exposure and were compared with bulk and ionic forms using a set of 38 genes based on the *A. thaliana* orthologs as potential biomarkers of exposure/effects (Marmiroli et al., 2014). The responses observed were generally different in term of up- or down-regulation as a function of Ce form (Pagano et al., 2016). Of particular interest are impacts on the chloroplast are the *PetL* and *PSBN* genes, which encode for a structural component of the cytochrome b_6f complex and low molecular weight protein located on thylakoid membrane as a component of the photosystem II (PSII), respectively (Figure 2~~1~~, Table 1). These two chloroplastic genes were differentially expressed across nano-, bulk, and ionic forms. A similar trend was also evident for nLa_2O_3 and nCuO exposure scenarios. Interestingly, by analyzing the effects on chloroplast and mitochondrial genomes in *A. thaliana* in terms of copy number, the effects of $nCeO_2$ and $CeCl_3$ exposure were rather limited as compared to the untreated control, which ~~is in agreement~~agrees with the limited translocation to the shoots (Pagano et al., 2022). With regard to proteomic analysis, Majumdar et al. (2015) conducted a quantitative proteomic analysis of kidney beans (*Phaseous vulgaris* L.) seeds after $nCeO_2$ exposure and reported that the major seed proteins associated with nutrient storage (phaseolin) and carbohydrate metabolism (lectins) were significantly

reduced by $nCeO_2$ (62.5-500 mg kg^{-1}, 50d exposure) in a dose dependent manner. Interesting, the plants did not exhibit overt toxicity.

In fact, at the physiological level cerium-based nanoparticles generally do not produce phytotoxicity (Ma et al., 2015; Rui et al., 2014; Lizzi et al., 2020; Rodrigues et al., 2021), though some have highlighted a positive impact on biomass and on physiological indicators such as chlorophyll and photosynthesis at selected doses (Rossi et al., 2017; Gui et al., 2017). Another important aspect of $nCeO_2$ seems to involve enhance tolerance to saline stress, leading to improved phenotypic and enzymatic performances and ROS elimination in seeds priming (An et al., 2020; Liu et al., 2021; Hassanpouraghdam et al., 2022; Chen et al., 2022).

Compared to $nCeO_2$, nanoscale lanthanum oxide (nLa_2O_3) exhibits lower stability, increased ion dissolution, greater translocation from roots and shoots, all of which seems to lead to higher phytotoxicity. ~~The limited stability of nLa_2O_3 has been confirmed by μ-XRF analysis performed in *Cucumis sativus* L. (Ma et al., 2015).~~ The limited stability of nLa_2O_3, as compared to $nCeO_2$, has been confirmed by μ-XRF analysis in *Cucumis sativus* L. through element speciation, dissolution studies in aqueous solution and *in planta*. After 14d treatment, the $nCeO_2$ structure in the roots remains mostly preserved (more than 80%) while pristine nLa_2O_3 structure was observed at levels below 10% (Ma et al., 2015).

Interestingly, co-contamination with $nCeO_2$ strongly reduces the uptake of nLa_2O_3 (Pagano et al., 2017). The different behaviour of the two ENMs was evident in the transcriptomic profile: only 7 out of 38 genes were commonly modulated between $nCeO_2$ and nLa_2O_3; these genes were involved in primary metabolic functions, protein synthesis and stress response (Pagano et al., 2016). Several publications using different model plants were compared, and the reported effects due to nLa_2O_3 exposure in soil include reduction in root and leaf biomass (Ma et al., 2015), decreased transpiration (Yue et al., 2019), decreased photosynthesis (Xiao et al., 2021) and reduced pigment concentration (Neves et al., 2019). The decrease in photosynthetic activity is also reflected by altered root morphology, including root cracking (Xiao et al., 2021) and the presence of apoplastic barriers (Yue

Formatted: Subscript

Formatted: Subscript

Formatted: Subscript

Formatted: Subscript

Formatted: Subscript

Formatted: Subscript

et al., 2019). Interestingly, the adverse effect of nLa_2O_3 on plant biomass was alleviated under binary exposure combinations with ENMs such as nCuO and nZnO (Pagano et al., 2017). As ideal case study, information on RedOx state and potential translocation of lanthanide-based nanoforms within plant tissues become fundamental in the mechanistic understanding on the physiological and molecular effects, with regard to application in the agrifood sector.

2.2. Titanium oxide ENM

Titanium dioxide ($nTiO_2$) has been largely studied as a potential environmental and agricultural contaminant (Servin et al., 2012; 2013). $nTiO_2$ has demonstrated a high stability, both in anatase and rutile crystal form (Servin et al., 2012). Translocation of $nTiO_2$ (0-750 mg kg^{-1}, 150d exposure) from soil to roots and to shoots in *C. sativus* is generally limited, though the two crystal structures were evident in the leaf trichomes and fruit by μ-XANES spectra (Servin et al., 2013). Ruotolo et al. (2018) analyzed and reviewed the molecular responses of *A. thaliana* and other model species to $nTiO_2$ and reported that exposure triggers an abiotic stress response at the transcriptomic level, involving ROS detoxification systems, triterpenoid and phenylpropanoid metabolism, and hormone signaling pathways involving in the response to salicylic acid, jasmonic acid, ethylene, and brassinosteroids. At the post-transcriptional level, several miRNAs were strongly modulated, including miR395 and miR399 as key regulators of plant adaptive responses to nutrient starvation (Pagano et al., 2021). Thus, the ability of $nTiO_2$ to modulate ROS signaling is particularly effective under abiotic stress conditions. Here, the presence of this ENMs enhances plant physiological parameters by stimulating the activation of several defense mechanisms. Several studies (in plants such as *C. sativus*, *S. lycopersicum*, *V. faba*) have shown that in both saline soils and under drought conditions, the addition of $nTiO_2$ increases root length, plant biomass, and other parameters such as H_2O_2 level, antioxidant activity, sugar content, and chlorophyll amount (Servin et al., 2012; Nasir Kahn, 2016; Abdel Latef et al., 2018; Mustafa et al., 2021). However, higher concentrations can result in phytotoxicity, likely due to aggregation and subsequent excessive ROS production (Mattiello et al., 2015; Gohari et al.,

Formatted: Outline numbered + Level: 2 + Numbering Style: 1, 2, 3, … + Start at: 1 + Alignment: Left + Aligned at: 0" + Indent at: 0.25"

Formatted: Font: (Default) Times New Roman, Italic

2020). However ROS are "double blade" sword because they can also trigger produ~~i~~ction of defensive molecules as shown recently by Castro et al., (2021). Interestingly, when either considering the utilization of pristine and coated $nTiO_2$ (hydrophilic or hydrophobic) in carrot (*Daucus carota* L.), responses observed depended mainly on the $nTiO_2$ surface coating, concentration and in soil weathering (Wang et al., 2021a; 2021b). Taproot and leaf fresh biomass and plant height were all increased with exposure, as well as nutrient uptake (Fe in leaves; Mg in taproots; Ca, Zn, K in roots). Conversely, sugar and starch contents were negatively affected, compromising the nutritional quality (Wang et al., 2021b).

2.3. Gold and silver nanoparticles

Similar to $nTiO_2$, gold nanoparticles (nAu) are highly stable in plants: nAu remained mostly as Au^0 within the plant tissues (*Nicotiana tabacum* L. cv. Xanthi nc.-), even if accumulated and translocated (Sabo-Attwood et al., 2011). Specifically, XANES analyses demonstrated that nAu maintained its nanoparticle structure without any biotransformation or ionic release. There are no actual uses for gold nanoparticles and plants, it just used as a tool to study NP-plant interactions. nAu levels in biosolids would ever be high enough to be considered phytotoxic. It is known that nAu toxicity depends on concentration, particle size and shape: nAu with a smaller particle size (3.5nm, concentration of 48 mg L^{-1}) were evenly biodistributed across the plant in comparison with the 18.5nm nAu (in a concentration of 76 mg L^{-1}), even leading to the formation of necrotic leaf lesions and plant death after 30 days (Sabo-Attwood et al., 2011). Other studies have shown that nAu exposure improved radical scavenging and antioxidant enzymatic activities and modulated miRNA expression implicated plant abiotic stress response (miR398, miR408). In particular, the regulation of superoxide dismutase (SOD) led to an increased ROS scavenging activity, root elongation, seedling growth, and seed yield (Arora et al. 2012; Kumar et al., 2013; Siddiqi & Husen, 2017).

Formatted: Subscript

Formatted: Font: Italic

Formatted: Subscript

Formatted: Outline numbered + Level: 2 + Numbering Style: 1, 2, 3, … + Start at: 1 + Alignment: Left + Aligned at: 0" + Indent at: 0.25"

Formatted: Font: (Default) Times New Roman, Italic

Given the widespread commercial utilization and environmental relevance (*e.g.*, wastewater treatment; fertilization) of silver nanoformulations (nAg), the effect on plant species has been a topic of robust study. Stegemeier et al. (2015) analyzed the nAg and nAg_2S speciation in *Medicago sativa* L., demonstrating that nAg accumulates in the root elongation area but that nAg_2S remains adhered to the root surface; Ag ions accumulate more uniformly throughout the root tissues. Notably, the Ag accumulation in the root apoplast was determined by XRF. The presence of nAg in root cell walls demonstrated the uptake of partially dissolved nAg and translocation along the apoplast. Larue et al. (2014) localized and determined nAg speciation in *L. sativa* after foliar spray treatment through μ-XRF and μ-XAS techniques; the authors reported that nAg was able to cross the foliar cuticle, penetrating in the leaf tissue through the stomata. Moreover, nAg biotransformed through oxidation and complexation with thiol-containing molecules such as glutathione (GSH). These findings correlated well with the transcriptomics analyses of *A. thaliana* exposed to different types of nAg: plant response included defensin-like proteins, plant thionin, β-glucosidases, cytochrome P450 proteins, and glutathione-S-transferase (GST) members (Kaveh et al., 2013). Although some studies point out that the morphological and physiological effects of nAg exposure were strictly dependent on particle size and concentration and that sublethal concentrations may have also beneficial effects (Wang et al., 2013; Syu et al., 2014), most of reports demonstrated reduced root elongation and shoot biomass, together with decreased levels of chlorophyll, pigments, micronutrients, and increased level of ROS and activity of enzymes involved in the oxidative stress response (Yin et al., 2011; Zuverza-Mena et al., 2016; Yang et al., 2018; Lahuta et al., 2022).

2.4. Iron-based ENMs

Formatted: Outline numbered + Level: 2 + Numbering Style: 1, 2, 3, … + Start at: 1 + Alignment: Left + Aligned at: 0" + Indent at: 0.25"

Iron-based nanomaterials, including iron oxides (nFeOx) and zero valent iron (nZVI), have been investigated in plant systems and the reports highlight two major routes of entry: i) a reductive and proton-promoted process able to modify the structure of the ENM or ii) through the secretion of plant transporters (*e.g.*, phytosiderophores) with a high affinity for Fe (III) (Morrissey & Guerinot, 2009).

Dwivedi et al. (2018) investigated nZVI exposure in *C. sativus* and reported that transformed nZVI was stored in the root cell membrane and vacuoles of the leaf parenchyma. XAS identified ferric citrate and iron (oxyhydr)oxides as the main transformation products in roots and shoots, albeit in different proportions. The major pathways of nZVI biotransformation invovle interaction with low molecular weight organic acid ligands and on the dissolution/precipitation of the mineral products. Transcriptional analyses performed on H+-ATPase genes (*CsHA1*, *CsHA2*) showed an upregulation of these genes upon nZVI exposure (and relative root acidification), indicating that the plant-promoted transformation of nZVI can be driven by protons released by the roots.

A separate study investigated the effects of nFe_2O_3 and nFe_3O_4 on *A. thaliana*, highlighting differences in the response between nanoparticle forms and metal salts through a nanoscale-specific response pathway involving energy production and oxidative stress. The differential response was ascribed to the ENM and the metal salt dissolution rates and the toxicity of the metal ion, which is more compatible with biotransformation processes in the plant tissues. Importantly, specific effects on plastid and mitochondrial genomes were evident, with nFeOx causing a 1- to 3-fold increase in ptDNA and mtDNA copy numbers depending on the stability of the nanoform utilized (Pagano et al., 2022).

Given their widespread application in soil and water remediation, a primary concern with iron nanoparticles is a potential toxicity from excessive accumulation in the environment. However, several studies have shown that plant exposure to this type of nanoparticle does not result in phytotoxicity. For example, Dwivedi et al. (2018) evaluated the potential environmental impact of nZVI on *C. sativus* in soil and in hydroponic culture, and reported no instances of reduced plant biomass even at the highest doses (from 250 to 1000 mg L^{-1}) and for *O. sativa*, the low doses (50-500 mg L^{-1}) of nZVI and nFe_3O_4 improved plant growth (Li et al., 2021). The use of this nanomaterial as a soil conditioner for remediation of metal-contaminated soils is confirmed by the demonstration of improved plant growth in Cd-contaminated soils (Rizwan et al., 2019; Manzoor et al., 2021);

mechanistically, this involves limiting cadmium translocation and the promotion of antioxidant activity.

In summary, the extent and the degree of biotransformation of nZVI, which consists in the biochemical alteration of chemical compounds within a living tissue, are reflected in the physico-chemical properties, macromolecular interaction, and biologically mediated pathways observed.

2.5. Zinc-based ENMs

Formatted: Indent: Left: -0.01", Hanging: 0.3", Outline numbered + Level: 2 + Numbering Style: 1, 2, 3, … + Start at: 1 + Alignment: Left + Aligned at: 0" + Indent at: 0.25"

Zinc-based nanomaterials have been applied to plants to increase food safety, promote food production and enhance sustainability by reducing oxidative stress symptoms induced by abiotic stressors (Faizan et al., 2021). nZnO is characterized by a low stability, and a high dissolution rate (Lv et al., 2021). Hernandez-Viezcas et al. (2013) exposed *Glycine max* L. to nZnO (500 mg kg^{-1}, 48d exposure): μ-XRF analysis showed no detectable ZnO NPs within the tissues, while μ-XANES data showed O-bound Zn in a form resembling Zn citrate. Lv et al. (2015) studied the effects of nZnO in *Z. mays* L. and used μ-XANES to demonstrate that the majority of accumulated Zn was derived from Zn^{2+} released from the nanoparticles and was accumulated mainly as Zn phosphate in epidermis, cortex, and root tip cells. The results were correlated to transcriptomic analyses in which gene ontology (GO) performed in nZnO-exposed *A. thaliana* revealed significant commonalities with the response to Zn^{2+} ions, particularly with proteins involved in metal binding, transport, metal homeostasis and detoxification. This suggests that Zn ion release by nZnO is a key in mediating the overall effect on plant species (Landa et al., 2015). These findings have been extended to other species, such as *C. pepo* L.; here nZnO treatment was shown to modulate genes that encode for transporters of heavy metals, cellular response to abiotic stress, decreased chlorophyll production, and induction of secondary metabolite biosynthesis (Pagano et al., 2017).

In recent years other forms of Zn-based nanomaterials have been tested for a potential plant remediation purpose, such as ZnS QDs (Imperiale et al., 2022). An analysis of the effect of ZnS QDs and ionic Zn exposure on mitochondrial and plastid genome copy number demonstrates that both

increase by 1 to 3-fold), but that ZnS QDs dissolution alone does not explain the phenomenon; this suggests that ZnS QDs biotransformation may occur within the plant tissues and organs to a form more similar to ionic than nanoscale Zn (Pagano et al., 2022). Zinc-based nanomaterials have also shown interesting properties as nanofertilizers, including mitigating abiotic and biotic stress (*e.g.*, salt stress, infections), regulating micronutrient uptake, improving water use efficiency, and promoting detoxification of heavy metals (Akhtar et al., 2021; Zafar et al., 2022). Under drought conditions, the nZnO (5 mg kg^{-1}) significantly increased grain yield in sorghum (*Sorghum vulgare* Moench) and fruit yield in eggplant (*Solanum melongena* L.*)*, respectively by 22-183% and 12-23% (Dimkpa et al., 2019; Semida et al., 2021).

2.6. -Copper oxide

Formatted: Indent: Left: -0.01", Hanging: 0.3", Outline numbered + Level: 2 + Numbering Style: 1, 2, 3, … + Start at: 1 + Alignment: Left + Aligned at: 0" + Indent at: 0.25"

Copper oxide nanomaterials (nCuO) are among the most utilized ENMs with plants, including use as a nanopesticide or nanofertilizer (Elmer et al., 2018; Lowry et al., 2019; Xu et al., 2022). ~~Copper oxide nanomaterials (nCuO) are one of the most utilized ENMs with plants, including use as a nanofertilizer (Elmer et al., 2018; Lowry et al., 2019).~~ nCuO dissolution within the plant tissues has been demonstrated (in *C. pepo*), and this was shown to depend not only on uptake, and translocation, but also on the interaction with important biomolecules (Tamez et al., 2019; Marmiroli et al., 2021). EXAFS (Marmiroli et al., 2021) demonstrated that the local Cu environment in the higher shells shows small differences between roots and flowers. A second Cu-O shell path was present in both flowers and roots; a Cu-Cu bond was also observed in ~~roots, but~~roots but was not observed in flowers. A full transcriptomics analysis by RNAseq was performed to highlight the differential responses between nano-, bulk and ionic forms in roots, leaves and pollen (Marmiroli et al., 2021). The results highlighted the nano-specificity of the responses; the modulated genes (significantly up- or down-regulated genes) observed were more significant in the roots and decreased with translocation to leaves and pollen. However, the portion of the response common to the three Cu forms tested was shown to increase following the translocation from roots to shoots (Marmiroli et al., 2021). A

characterization of the main steps and implications involved in this phenomenon, as well as some relevant biomarkers observed in different plant species, is presented in Figure 2~~1~~ (details reported in Table 1).

Additional data was presented by Servin et al. (2017a), who studied nCuO weathering in *Lactuca sativa* L.: lettuce was exposed to unweathered and 70d-weathered nCuO, and corresponding bulk and ionic form (0–400 mg kg^{-1}) for 70 d in soil. To assess nCuO trophic transfer, leaves were fed to crickets (*Acheta domestica* L.) as primary consumer, followed by insect feeding to lizards (*Anolis carolinensis* L.) as secondary consumer, in both cases for 15d. The authors used μ-XANES to show that Cu(II) was reduced to Cu(I) within the plant roots, and used a transcriptional analysis of to show that several biomarkers, including *CCH* and *COPT5*, which encodes for a copper chaperon and a copper ion transporter, respectively, were significantly decreased by weathering.

In spite of being widely used, results regarding the physiological effects upon nCuO exposure are rather discordant. For example, Deng et al. (2022a) reported that, unlike the bulk counterpart, nCuO (0-600 mg kg^{-1} of soil) does not produce toxicity in rice (*O. sativa*), but rather improves the supply of essential elements, including increasing content of sugar and starch, as well as overall yield.

The grain of weedy and cultivated rice were differentially impacted by nCuO, bulk or ionic forms, showing also a cultivar-specific and concentration-dependent response. Cu translocation directly influenced plant yield, sugar production, starch content, protein content, and expression of auxin associated genes in grain (Deng et al., 2022b). Analyzing the effect of citric acid (CA) coated copper oxide (CA-nCuO) and its application (foliar spray or soil exposure) on the growth and physiology of soybean (*Glycine max* L.), nCuO appeared to be more accessible for plant uptake, as compared to CA-nCuO, decreasing the protein content, and inhibiting plant growth. CA reduced CuO NPs toxicity, demonstrating that surface modification may change the toxic properties of NPs. (Deng et al., 2022c).

Treatment of *Lactuca sativa* L. with nCuO significantly increased biomass as compared to CuO microparticles (Wang et al., 2019). In addition, plants can benefit from nCuO treatment through

Formatted: Font: Italic

Formatted: Font: Italic

enhanced defensive pathways, and through direct antimicrobial and antifungal activities (Elmer et al., 2018). ~~Similarly, *L. sativa* treatment with nCuO significantly increased biomass relative to CuO microparticles (Wang et al., 2019). In addition, nCuO can benefit plants through enhanced defensive pathways, as well as through direct antimicrobial and antifungal activities (Elmer et al., 2018).~~ For example, exposure of nCuO to *Solanum lycopersicum* increased root and stem length, leaf number, and chlorophyll content, and also inhibited the mycelial growth of *Fusarium oxysporum* sp. Lycopersici (Lopez-Lima et al., 2021). Conversely, some authors report toxic and inhibitory effects on the growth in plants such as lettuce (*Lactuca sativa* L., 0-1000 mg $L^{-1,}$ 5-15d exposure by foliar spray), turnip (*Brassica rapa* L., 50-500 mg L^{-1}, 14d exposure), and wheat (*Triticum aestivum* L., 50 mg kg^{-1} in sand, 1-14d exposure) upon nCuO treatment. The toxic effects are largely ascribed to the redox reactivity and ROS generation of the nanoparticle form (Dimkpa et al., 2012; Chung et al., 2019; Xiong et al., 2020). Others have reported no significant impact at the physiological level (Servin et al., 2017a; Tamez et al., 2019; Marmiroli et al., 2021; Roubeau Dumont et al., 2022), which highlights the importance of the experimental variables and design, including dose, particle properties, exposure conditions and endpoints.

2.7. Quantum dots

Formatted: Indent: Left: 0", Hanging: 0.3", Outline numbered + Level: 2 + Numbering Style: 1, 2, 3, … + Start at: 1 + Alignment: Left + Aligned at: 0" + Indent at: 0.25"

Cadmium-based nanomaterials, and cadmium sulfide quantum dots (CdS QDs) in particular, have been used ~~–~~as a model material to elucidate physiological mechanisms and molecular pathways involved in the response plant response to exposure (Marmiroli et al., 2014; Imperiale et al., 2022). A Systems biology approach gave a complete picture of the targets in both model (*A. thaliana*) and crop (*C. pepo*) species (Marmiroli et al., 2014; Marmiroli et al., 2015; Pagano et al., 2017; Gallo et al., 2021; Marmiroli et al., 2020; Pagano et al., 2022). In *A. thaliana*, CdS QDs tolerant mutants were used to establish *in vitro* inhibition concentrations for growth (80 mg L^{-1}) in an attempt to elucidate the mechanisms involved in the plant response; the results largely implicated metabolic functions and chloroplast energy production as sensitive targets (Marmiroli et al., 2014). The results demonstrate

that CdS QDs and ionic Cd were exploiting different pathways in the plant, highlighting that the tolerance to CdS QDs did not ~~overlapped~~overlap with the tolerance to $CdSO_4$. Conversely, Cd sensitive mutants of Arabidopsis (Howden & Cobbett, 1992) that were exposed to CdS QDs did not exhibit differences in growth as compared to the wild type line (Marmiroli et al., 2014). A transcriptomic analysis and proteomic comparison between wild type and tolerant mutants highlighted that only a few genes were commonly modulated upon ionic Cd and CdS QDs treatment (Marmiroli et al., 2015, Gallo et al., 2021). Marmiroli et al., (2020) used EXAFS to investigate the cadmium environment in planta and showed that the spectra were compatible with a mixed O/S coordination; while Cd–S distances did not show relevant variations, Cd–O distances varied in samples grown with QDs compared with those grown with $CdSO_4$. The number of Cd–S bonds in plants grown with QDs was higher than Cd–O bonds. This EXAFS analysis demonstrated that CdS QDs were biotransformed after uptake: the QD original structure was modified but not completely absent within the plant cell, and Cd atoms were not released as Cd ions. Interestingly, CdS QDs showed a relatively high stability; once accumulated by the plant, the QD may go through different stages in the response pathways: i) exposure: explained by the different genetic mechanisms behind the physiological/molecular response between the wild type and tolerant phenotypes; ii) reactivity/biotransformation: explained by a transition phase in which the structure of CdS QDs is modified to decrease particle reactivity, and this can be detected by XANES and EXAFS analyses; iii) effects/detoxification: transcriptomic, proteomic and metabolomic response related to the physico-chemical forms after QDs biotransformation. Additionally, the effects on organelle genomes (ptDNA and mtDNA) demonstrate how QDs biotransformation may modify the genomes stoichiometry or sub-stoichiometry, likely through potential morpho-functional adaptive response triggered by modifications in the bioenergetic redox balance, or a reduction of photosynthesis or cellular respiration rates after QD exposure (Pagano et al., 2022).

Similarly to what was observed in *A. thaliana*, CdS QDs induced analogous effects other plant species of agricultural interest: Pagano et al. (2017) analyzed the effects of the CdS QDs in a context of

ENMs binary co-contamination, highlighting a similar response as in *A. thaliana*; specific and common biomarkers were involved between CdS QDs and other the ENMs tested ($nCeO_2$, nLa_2O_3, nCuO, nZnO). Majumdar et al. (2019) investigated the effect of differently functionalized CdS QDs in *G. max*; the authors used proteomic and metabolomic endpoints to demonstrate how the transmembrane proteins involved uptake and related genes including *NRAMP6* and *HMA8* were differently regulated in CdS QDs and ion treated plants. In addition, ATP-dependent ion transporters in the membranes presented feedback mechanisms in the soybean roots to restrict the uptake of CdS QDs and simultaneously to alter the mineral acquisition. Moreover, CdS QDs altered major metabolic functions, including glutathione metabolism, the tricarboxylic acid cycle, glycolysis, fatty acid oxidation and phenylpropanoid and amino acids biosynthesis. Physiologically, CdS QDs, induced oxidative stress, decreased biomass, reduced chlorophyll and carotenoids content, and damaged primary roots (Majumdar et al., 2019; Pagano et al., 2022).

3. Biotransformation as a perspective to comprehend ENM response in plant

ENMs have been rather extensively tested in recent years, with data indicating that several physico-chemical parameters are fundamental to explaining their behaviour during exposure, including composition, stability, surface charge, and functionalization. These ENM properties become biologically relevant and mediate subsequent biotransformation processes, including: i) the possibility to be translocated within organs, tissues, and cells; ii) the ability to interact with the biologically active environment within the plant (*e.g.*, phospholipids, nucleic acids, proteins, secondary metabolites, reactive oxygen species); iii) the dissolution rate and the consequent ion release. Importantly, to fully comprehend the plant response to ENMs exposure, one must consider the biologically modified ENMs forms that are indicative of the highly complex interactions between plants and ENMs interaction. Integration of the information from physiological and molecular analyses with physical evidence (*e.g.*, types and number of atoms surrounding the ENM, radial

Formatted: Indent: Left: 0", Hanging: 0.2", Outline numbered + Level: 1 + Numbering Style: 1, 2, 3, … + Start at: 2 + Alignment: Left + Aligned at: 0" + Indent at: 0.25"

Formatted: Font: Italic

distance between atoms of the interactors and atoms constituting the ENM; ENM crystal structure) obtained through high energy X-ray spectroscopy platforms such as synchrotron-based techniques will enable a more realistic, mechanistic, and systems-level picture of ~~of~~ plant response to ENM exposure.

This review describes some of the primary biological constraints that determine ENM biotransformation in plants (Figure 2~~1~~, Table 2). For ENMs characterized by high stability, such as $nCeO_2$, $nTiO_2$ or nAu, limited dissolution and translocation has been observed, even considering differences determined by structure and atomic properties related to the redox state (*e.g.*, the redox state of Ce). Conversely, ENMs with higher dissolution such as Fe- or Zn-based ENMs, nCuO, nAg or nLa_2O_3, exhibit greater translocation rates, likely involving a dynamic process of particle interaction with the plant biomolecules that increase ENM solubility and bioavailability, as exemplified with nCuO (Marmiroli et al., 2021).

The importance of in planta ENM biotransformation is corroborated indirectly at molecular level by "omic" analyses that can describe the effects on the plant at genetic and epigenetic level (including genome stability) by measuring transcriptional modulation, protein abundance and metabolite synthesis, as well as on physiological (phenotypical) level by observing the plant redox state, ROS production, photosynthetic activity, and cellular respiration rate in response to stress (Marmiroli et al., 2020; Gallo et al., 2021). The direct measurement of changes upon ENM biotransformation within the plant tissues by synchrotron-based techniques (µ-XRF, µ-XANES, and XAS) provide critical information in terms of distribution, atomic redox state, and atomic local structure, and add critical knowledge necessary to understand the ENM-plant interactions. This information is highly relevant with regard to potential applicability: ENMs can interact with sensitive ecosystem components within trophic food chains, affect microbial populations in soil, enter into the plant and where they can be translocated to different tissues and organs, including the edible tissues or organs (Holden et al., 2013; Liu et al., 2015). Biotransformation can occur at each step within these processes, modifying and/or amplifying ENM effects at organism level. These interactions from the level of ecosystem, organism,

tissue, cell, and organelles become key factors when applying "ENM biotransformation" as a concept for a safer design, when considering applications for agriculture and food production, and for minimizing the adverse biological impact (Burello & Worth, 2015; Pagano et al., 2018; Lowry et al., 2019; Kah et al., 2019; Zulfiqar et al., 2019; Ma et al., 2020; Hameed et al., 2022; Xu et al., 2022)~~This information is highly relevant with regard to applications: ENMs can clearly interact with sensitive ecosystem components and within the trophic food chains, alter microbial populations in soil, enter in plants and be translocated to different tissues and organs, including edible tissues (Holden et al., 2013; Liu et al., 2015). Biotransformation can occur at each step of these processes, modifying and/or amplifying the effects ENM effects at the level organisms. These interactions at the level of ecosystem, organism, tissue, cell, and organelles become key factors in applying "ENM biotransformation" as a concept for safer design when considering applications for agriculture and food production, for minimizing the adverse biological effects (Burello & Worth, 2015; Pagano et al., 2018; Lowry et al., 2019; Kah et al., 2019; Zulfiqar et al., 2019; Ma et al., 2020; Hameed et al., 2022)~~.

Author contributions

Conceptualization: LP, MM; original draft preparation: LP, MM, RR; review and editing: JCW, NM. All authors revised and agreed on the final version of the manuscript.

Acknowledgements

This work was supported by European Union's HORIZON 2020 research and innovation Programme [grant number 818431 SIMBA], European Union's PRIMA Programme [grant number 1811 SUSTAINOLIVE], and FIL (Fondi Locali per la Ricerca). The funding sources had no involvement in study design, collection, analysis and interpretation of data, writing, decision to submit the paper.

Declaration of competing interest

The authors declare no competing financial interests.

References

Abutalib M.M., Rajeh A. 2020. Enhanced structural, electrical, mechanical properties and antibacterial activity of Cs/PEO doped mixed nanoparticles (Ag/TiO_2) for food packaging applications. Polymer Testing. 107013.

Abdel Latef A.A.H., Srivastava A.K., El-sadek M.S.A., Kordrostami M., Tran L.-S.P. 2018. Titanium dioxide nanoparticles improve growth and enhance tolerance of broad bean plants under saline soil conditions. Land Degrad. Dev. 29, 1065–1073.

Akhtar N., Ilyas N., Meraj T.A., Pour-Aboughadareh A., Sayyed R.Z., Mashwani Z.U.R., Poczai P. 2022. Improvement of Plant Responses by Nanobiofertilizer: A Step towards Sustainable Agriculture. Nanomaterials. 12, 965.

An J., Hu P., Li F., Wu H., Shen Y., White J.C., Tian X., Li Z., Giraldo J.P. 2020. Molecular mechanisms of plant salinity stress tolerance improvement by seed priming with cerium oxide nanoparticles. Environ. Sci: Nano. 7, 2214.

Arora S., Sharma P., Kumar S., Nayan R., Khanna P.K., Zaidi M.G.H. 2012. Gold-nanoparticle induced enhancement in growth and seed yield of *Brassica juncea*. Plant Growth Regul. 66, 303–310.

Burello E., Worth A.P. 2015. A rule for designing safer nanomaterials: do not interfere with the cellular redox equilibrium. Nanotoxicology. 9, 116-117.

Castillo-Michel H.A., Larue C., Pradas del Real A.E., Cotte M., Sarret G. 2017. Practical review on the use of synchrotron based micro- and nano- X-ray fluorescence mapping and X-ray absorption spectroscopy to investigate the interactions between plants and engineered nanomaterials. Plant Physiol Biochem. 110, 13-32.

Castro B., Citterico M., Kimura S., Stevens D.M., Wrzaczek M., Coaker G. 2021. Stress-induced reactive oxygen species compartmentalization, perception and signalling. Nat. Plants 7, 403–412.

Chebakova K.A., Dzidziguri E.L., Sidorova E.N., Vasiliev A.A., Ozherelkov D.Y., Pelevin I.A., Gromov A.A., Nalivaiko A.Y. 2021. X-ray Fluorescence Spectroscopy Features of Micro- and Nanoscale Copper and Nickel Particle Compositions. Nanomaterials. 14, 11(9), 2388.

Chen L., Peng Y., Zhu L., Huang Y., Bie Z., Wu H. 2022. CeO_2 nanoparticles improved cucumber salt tolerance is associated with its induced early stimulation on antioxidant system. Chemosphere. 299, 134474.

Chang C., Bowman J.L., Meyerowitz E.M. 2016. Field Guide to Plant Model Systems. Cell. 167, 325-339.

Chung I.M., Rekha K., Venkidasamy B., Thiruvengadam M. 2019. Effect of Copper Oxide Nanoparticles on the Physiology, Bioactive Molecules, and Transcriptional Changes in *Brassica rapa* ssp. rapa Seedlings. Water. Air. Soil Pollut. 230, 48.

d'Acapito F., Lepore G.O., Puri A., Laloni A., La Manna F., Dettona E., De Luisa A., Martin A. 2019. The LISA beamline at ESRF. J. Synchrotron Rad. 26, 551-558.

Deng C., Wang Y., Cota-Ruiz K., Reyes A., Sun Y., Peralta-Videa J.R., Hernandez-Viezcas J.A., Turley R.S., Niu G., Li C., Gardea-Torresdey J.L. 2020. Bok choy (*Brassica rapa*) grown in copper oxide nanoparticles-amended soils exhibits toxicity in a phenotype-dependent manner: Translocation, biodistribution and nutritional disturbance. J Haz Mater, 398, 122978.

Deng C., Wang Y., Navarro G., Sun Y., Cota-Ruiz K., Hernandez-Viezcas J.A., Niu G., Li C., White J.C., Gardea-Torresdey J. 2022a. Copper oxide (CuO) nanoparticles affect yield, nutritional quality, and auxin associated gene expression in weedy and cultivated rice (*Oryza sativa* L.) grains. Sci. Total Environ. 810, 152260.

Deng C., Wang Y., Navarro G., Sun Y., Cota-Ruiz K., Hernandez-Viezcas J.A., Niu G., Li C., White J.C., Gardea-Torresdey J. 2022b. Copper oxide (CuO) nanoparticles affect yield, nutritional quality, and auxin associated gene expression in weedy and cultivated rice (Oryza sativa L.) grains, Scie Tot Environ, 810, 152260.

Deng C., Wang Y., Cantu J.M., Valdes C., Navarro G., Cota-Ruiz K., Hernandez-Viezcas J.A., Li C., Elmer W.H., Dimkpa C.O., White J.C., Gardea-Torresdey, J.L. 2022c. Soil and foliar exposure of soybean (*Glycine max*) to Cu: Nanoparticle coating-dependent plant responses, NanoImpact, 26,100406.

Dimkpa C.O., McLean J.E., Latta D.E., Manangón E., Britt D.W., Johnson W.P., Boyanov M.I., Anderson A.J. 2012. CuO and ZnO nanoparticles: Phytotoxicity, metal speciation, and induction of oxidative stress in sand-grown wheat. J. Nanoparticle Res. 14, 1125.

Formatted: Italian (Italy)
Formatted: Italian (Italy)
Formatted: Italian (Italy)
Formatted: Italian (Italy)
Formatted: Italian (Italy)
Formatted: Italian (Italy)
Formatted: Italian (Italy)
Formatted: Italian (Italy)
Formatted: Italian (Italy)
Formatted: Italian (Italy)
Formatted: Italian (Italy)
Formatted: Italian (Italy)
Formatted: Italian (Italy)
Formatted: English (United States)
Formatted: Font: Italic, English (United States)
Formatted: English (United States)
Formatted: English (United States)
Formatted: English (United States)
Formatted: Font: Italic

Dimkpa C.O., Singh U., Bindraban P.S., Elmer W.H., Gardea-Torresdey J.L., White J.C. 2019. Zinc oxide nanoparticles alleviate drought-induced alterations in sorghum performance, nutrient acquisition, and grain fortification. Sci. Total Environ. 688, 926–934.

Dwivedi A.D., Yoon H., Singh J.P., Chae K.H., Rho S-C., Hwang D.S., Chang Y-S. 2018. Uptake, Distribution, and Transformation of Zerovalent Iron Nanoparticles in the Edible Plant *Cucumis sativus*. Environ Sci Technol. 52 (17), 10057-10066.

EFSA. 2021. Safety assessment of titanium dioxide (E171) as a food additive. EFSA Journal. 19(5), 6585.

Elmer W., De la Torre-Roche R., Pagano L., Majumdar S., Zuverza-Mena N., Dimkpa C., Gardea-Torresdey, J.L., White J.C. 2018. Effect of Metalloid and Metal Oxide Nanoparticles on Fusarium Wilt of Watermelon. Plant Dis. 102, 1394−1401.

Eriksson P., Tal A.A., Skallberg A., Brommesson C., Hu Z., Boyd R.D., Olovsson W., Fairley N., Abrikosov I.A., Zhang X., Uvdal K. 2018. Cerium Oxide Nanoparticles with Antioxidant Capabilities And Gadolinium Integration For MRI Contrast Enhancement. Sci. Rep. 8, 6999.

Faizan M., Yu F., Chen C., Faraz A., Hayat S. Zinc Oxide Nanoparticles Help to Enhance Plant Growth and Alleviate Abiotic Stress: A Review. Curr Protein Pept Sci. 2021, 22(5), 362-375.

Gallo V., Zappettini A., Villani M., Marmiroli N., Marmiroli M. 2021. Comparative Analysis of Proteins Regulated During Cadmium Sulfide Quantum Dots Response in *Arabidopsis thaliana* Wild Type and Tolerant Mutants. Nanomaterials. 11, 615.

Gardea-Torresdey J.L., Rico C.M., White J.C. 2014. Trophic transfer, transformation, and impact of engineered nanomaterials in terrestrial environments. Environ. Sci. Technol. 48, 2526−2540.

Giese B., Klaessig F., Park B., Kaegi R., Steinfeldt M., Wigger H., von Gleich A., Gottschalk F. 2018. Risks, Release and Concentrations of Engineered Nanomaterial in the Environment. Sci Rep 8, 1565.

Gohari G., Mohammadi A., Ak A., Panahirad S. 2020. Titanium dioxide nanoparticles (TiO_2 NPs) promote growth and ameliorate salinity stress effects on essential oil profile and biochemical attributes of *Dracocephalum moldavica*. Sci. Rep. 10, 912.

Goldstein J.I., Newbury D.E., Echlin P., Joy D.C., Lyman C.E., Lifshin E., Sawyer L., Michael J.R. Editors. Scanning Electron Microscopy and X-Ray Microanalysis, Third Edition. 2003 Springer Science+Business Media LLC, 233 Spring Street, New York, NY 10013 USA.

Gottschalk F., Sonderer T., Scholz R.W., Nowack B. 2009. Modeled Environmental Concentrations of Engineered Nanomaterials (TiO2, ZnO, Ag, CNT, Fullerenes) for Different Regions. Environ. Sci. Technol. 43, 24, 9216–9222.

Gräfe M., Donner E., Collins R.N., Lombi E. 2014. Speciation of metal(loid)s in environmental samples by X-ray absorption spectroscopy: A critical review. Analytica Chimica Acta. 822, 1-22.

Gui X., Rui M., Song Y., Yuhui M., Rui Y., Zhang P., He X., Li Y., Zhang Z., Liu L. 2017. Phytotoxicity of CeO_2 nanoparticles on radish plant *(Raphanus sativus*). Environ. Sci. Pollut. Res. 24, 13775–13781.

Gurman S.J. 1995. Interpretation of EXAFS Data. J. Syncr. Rad. 2, (1), 56-63.

Hameed S., Baimanov D., Li X., Liua -K., Wang L. 2022. Synchrotron radiation-based analysis of interactions at the nano–bio interface. Environ. Sci.: Nano. Doi: 10.1039/D2EN00408A.

Hassanpouraghdam M.B., Mehrabani L.V., Bonabian Z., Aazami M.A., Rasouli F., Feldo M., Strzemski M., Dresler S. 2022. Foliar Application of Cerium Oxide-Salicylic Acid Nanoparticles (CeO2:SA Nanoparticles) Influences the Growth and Physiological Responses of *Portulaca oleracea* L. under Salinity. Int. J. Mol. Sci. 23, 1–19.

Hernandez-Viezcas J.A., Castillo-Michel H., Andrews J.C., Cotte M., Rico C., Peralta-Videa J.R., Ge Y., Priester J.H., Holden P.A., Gardea-Torresdey J.L. 2013. In situ synchrotron X-ray fluorescence mapping and speciation of CeO_2 and ZnO nanoparticles in soil cultivated soybean (*Glycine max*). ACS Nano. 26, 7(2),1415-1423.

Holden P.A., Nisbet R.M., Lenihan H.S., Miller R.J., Cherr G.N., Schimel J.P., Gardea-Torresdey J.L. 2013. Ecological Nanotoxicology: Integrating Nanomaterial Hazard Considerations Across the Subcellular, Population, Community, and Ecosystems Levels. Acc. Chem. Res. 46, 813−822.

Hong J., Wang C., Wagner D.C., Gardea-Torresdey J.L., He F., Rico C.M. 2021. Foliar application of nanoparticles: mechanisms of absorption, transfer, and multiple impacts. Environ. Sci.: Nano, 8, 1196-1210.

Howden R., Cobbett C.S. 1992. Cadmium-sensitive mutants of Arabidopsis thaliana. Plant Physiol. 99, 100−107.

Formatted: English (United States)

Huang Y., Li W., Minakova A.S., Anumol T., Keller A.A. 2018. Quantitative analysis of changes in amino acids levels for cucumber (*Cucumis sativus*) exposed to nano copper. NanoImpact. 12, 9−17.

Huangfu X., Xu Y., Liu C., He Q., Ma J., Ma C., Huang R. 2019. A review on the interactions between engineered nanoparticles with extracellular and intracellular polymeric substances from wastewater treatment aggregates. Chemosphere. 219, 766-783.

Imperiale D., Lencioni G., Marmiroli M., Zappettini A., White J.C., Marmiroli N. 2022. Interaction of hyperaccumulating plants with Zn and Cd nanoparticles. Sci Tot Environ. 817, 152741.

Judy J.D., Unrine J.M., Rao W., Wirick S., Bertsch P.M. 2012. Bioavailability of gold nanomaterials to plants: importance of particle size and surface coating. Environ Sci Technol. 7, 8467-8474.

Kah M., Kookana R.S., Gogos A., Bucheli T.D. 2018. A critical evaluation of nanopesticides and nanofertilizers against their conventional analogues. Nat. Nanotechnol. 13, 677–684.

Kah M., Tufenkji N., White J.C. 2019. Nano-enabled strategies to enhance crop nutrition and protection. Nat. Nanotechnol. 14, 532−540.

Karny A., Zinger A., Kajal A., Shainsky-Roitman J., Schroeder A. 2018. Therapeutic nanoparticles penetrate leaves and deliver nutrients to agricultural crops. Sci Rep. 8(1), 7589.

Kaveh R., Li Y.S., Ranjbar S., Tehrani R., Brueck C.L., Van Aken B. 2013. Changes in *Arabidopsis thaliana* gene expression in response to silver nanoparticles and silver ions. Environ. Sci. Technol. 47 (18), 10637−10644.

Formatted: English (United States)

Keller A.A., McFerran S., Lazareva A., Suh S. 2013. Global life cycle releases of engineered nanomaterials. J. Nanopart. Res. 15, 1692−1709.

Keller A.A., Lazareva A. Predicted Releases of Engineered Nanomaterials: From Global to Regional to Local. Environ. Sci. Technol. Lett. 2014, 1, 1, 65–70.

Kumar V., Guleria P., Kumar V., Yadav S.K. 2013. Gold nanoparticle exposure induces growth and yield enhancement in *Arabidopsis thaliana*. Sci. Total Environ. 461–462, 462–468.

Kumari P., Alam M., Siddiqi W.A. 2019. Usage of nanoparticles as adsorbents for wastewater treatment: An emerging trend. Sustain. Mater. Technol. 22, e00128.

Lahuta L.B., Szablińska-Piernik J., Głowacka K., Stałanowska K., Railean-Plugaru V., Horbowicz M., Pomastowski P., Buszewski B. 2022. The Effect of Bio-Synthesized Silver Nanoparticles on Germination, Early Seedling Development, and Metabolome of Wheat (*Triticum aestivum* L.). Molecules. 27, 2303.

Landa P., Prerostova S., Petrova S., Knirsch V., Vankova R., Vanek T. 2015. The Transcriptomic Response of *Arabidopsis thaliana* to Zinc Oxide: A Comparison of the Impact of Nanoparticle, Bulk, and Ionic Zinc. Environ. Sci. Technol. 49 (24), 14537−14545.

Larue C., Castillo-Michel H., Sobanska S., Cécillon L., Bureau S., Barthès V., Ouerdane L., Carrière M., Sarret G. 2014. Foliar exposure of the crop *Lactuca sativa* to silver nanoparticles: Evidence for internalization and changes in Ag speciation. J Haz Mat. 264, 98-106.

Li M., Zhang P., Adeel M., Guo Z., Chetwynd A.J., Ma C., Bai T., Hao Y., Rui Y. 2021. Physiological impacts of zero valent iron, Fe_3O_4 and Fe_2O_3 nanoparticles in rice plants and their potential as Fe fertilizers. Environ. Pollut. 269, 116134.

Liu W., Tian S., Zhao X., Xie W., Gong Y., Zhao D. 2015. Application of Stabilized Nanoparticles for In Situ Remediation of Metal-Contaminated Soil and Groundwater: a Critical Review. Curr. Pollut. Reports. 1, 280–291.

Liu Y., Persson D.P., Li J., Liang Y., Li T. 2021. Exposure of cerium oxide nanoparticles to the hyperaccumulator *Sedum alfredii* decreases the uptake of cadmium via the apoplastic pathway. J. Hazard. Mater. 417, 125955.

Lizzi D., Mattiello A., Piani B., Fellet G., Adamiano A., Marchiol L. 2020. Germination and early development of three spontaneous plant species exposed to nanoceria ($nCeO_2$) with different concentrations and particle sizes. Nanomaterials. 10, 1–16.

Lopez-Lima D., Mtz-Enriquez A.I., Carrión G., Basurto-Cereceda S., Pariona N. 2021. The bifunctional role of copper nanoparticles in tomato: Effective treatment for Fusarium wilt and plant growth promoter. Sci. Hortic. 2, 277.

López-Moreno M.L., de la Rosa G., Hernández-Viezcas J.A., Castillo-Michel H., Botez C.E., Peralta-Videa J.R., Gardea-Torresdey J.L. 2010. Evidence of the Differential Biotransformation and Genotoxicity of ZnO and CeO2 Nanoparticles on Soybean (*Glycine max*) Plants. Environ. Sci. Technol. 44, 19, 7315–7320.

Lowry G.V., Avellan A., Gilbertson L.M. 2019. Opportunities and challenges for nanotechnology in the agri-tech revolution. Nat. Nanotechnol. 14, 517−522.

Lv J., Zhang S., Luo L., Zhang J., Yang K., Christie P. 2015. Accumulation, speciation and uptake pathway of ZnO nanoparticles in maize. Environ. Sci.: Nano. 2, 68.

Lv J., Christie P., Zhang S. 2019. Uptake, translocation, and transformation of metal-based nanoparticles in plants: recent advances and methodological challenges. Environ. Sci.: Nano. 6, 41-59.

Lv Z., Sun H., Du W., Li R., Mao H., Kopittke P.M. 2021. Interaction of different-sized ZnO nanoparticles with maize (*Zea mays*): Accumulation, biotransformation and phytotoxicity. Sci Tot Environ. 796, 148927.

Ma C., White J.C., Zhao J., Zhao Q., Xing B. 2018. Uptake of Engineered Nanoparticles by Food Crops: Characterization, Mechanisms, and Implications. Annu. Rev. Food Sci. Technol. 9, 129–153.

Ma C., Borgatta J., Hudson B.G., Tamijani A.A., De La Torre-Roche R., Zuverza-Mena N., Shen Y., Elmer W., Xing B., Mason S. E., Hamers R. J., White J.C. 2020. Advanced material modulation of nutritional and phytohormone status alleviates damage from soybean sudden death syndrome. Nat. Nanotechnol. 15, 1033−1042.

Ma Y., Zhang P., Zhang Z., He H., Li Y., Zhang J., Zheng L., Chu S., Yang K., Zhao Y., Chai Z. 2015. Origin of the different phytotoxicity and biotransformation of cerium and lanthanum oxide nanoparticles in cucumber, Nanotoxicology. 9(2), 262–270.

Majumdar S., Almeida I.C., Arigi E.A., Choi H., VerBerkmoes N.C., Trujillo-Reyes J., Flores-Margez J.P., White J.C., Peralta-Videa J.R., Gardea-Torresdey J.L. 2015. Environmental Effects of Nanoceria on Seed Production of Common Bean (*Phaseolus vulgaris*): A Proteomic Analysis. Environ. Sci. Technol. 49, 22, 13283–13293.

Majumdar S., Pagano L., Wohlschlegel J.A., Villani M., Zappettini A., White J.C., Keller A.A. 2019. Proteomic, Gene And Metabolite Characterization Reveal The Uptake And Toxicity Mechanisms Of Cadmium Sulfide Quantum Dots In Soybean Plants. Environ. Sci.: Nano. 6, 3010−3026.

Manzoor N., Ahmed T., Noman M., Shahid M., Mudassir M., Ali L., Alnusaire T.S., Li B., Schulin R., Wang G. 2021. Science of the Total Environment Iron oxide nanoparticles ameliorated the cadmium and salinity stresses in wheat plants, facilitating photosynthetic pigments and restricting cadmium uptake. Sci. Total Environ. 769, 145221.

Marmiroli M., Pagano L., Savo Sardaro M.L., Villani M., Marmiroli N. 2014. Genome-wide approach in *Arabidopsis thaliana* to assess the toxicity of cadmium sulfide quantum dots. Environ. Sci. Technol. Environ. Sci. Technol. 48, 5902−5909.

Marmiroli M., Imperiale D., Pagano L., Villani M., Zappettini A., Marmiroli N. 2015. The Proteomic Response of *Arabidopsis thaliana* to Quantum Dots, and Its Correlation with the Transcriptomic Response. Front. Plant Sci. 6, 1104.

Marmiroli M., Lepore G.O., Pagano L., d'Acapito F., Gianoncelli A., Villani M., Lazzarini L., White J.C., Marmiroli N. 2020. The fate of CdS Quantum Dots in plants as revealed by Extended X-ray Absorption Fine Structure (EXAFS) analysis. Environ. Sci. Nano 7, 1150–1162.

Marmiroli M., Pagano L., Rossi R., De La Torre-Roche R., Lepore G.O., Ruotolo R., Gariani G., Bonanni V., Pollastri S., Puri A., Gianoncelli A., Aquilanti G., d'Acapito F., White J.C., Marmiroli N. 2021. Copper Oxide nanomaterial fate in plant tissue: Nanoscale impacts on reproductive tissues. Environ Sci Technol. 55, 15, 10769–10783.

Mattiello A., Filippi A., Poscic F., Musetti R., Salvatici M.C., Giordano C., Vischi M., Bertolini A., Marchiol L. 2015. Evidence of Phytotoxicity and Genotoxicity in *Hordeum vulgare* L. Exposed to CeO_2 and TiO_2 Nanoparticles. Front. Plant Sci. 6, 1043.

Milosevic A., Romeo D., Wick P. 2020. Understanding Nanomaterial Biotransformation: An Unmet Challenge to Achieving Predictive Nanotoxicology. Small. 1907650.

Mitrano D.M., Motellier S., Clavaguera S., Nowack B. 2015. Review of nanomaterial aging and transformations through the life cycle of nano-enhanced products, Environment International, 77, 132-147.

Morrissey J., Guerinot M.L. 2009. Iron uptake and transport in plants: the good, the bad, and the ionome. Chem. Rev. 109 (10), 4553−67.

Mustafa H., Ilyas N., Akhtar N., Iqbal N., Zainab T. 2021. Biosynthesis and characterization of titanium dioxide nanoparticles and its effects along with calcium phosphate on physicochemical attributes of wheat under drought stress. Ecotoxicol. Environ. Saf. 223, 112519.

Nasir Khan M. 2016. Nano-titanium Dioxide (Nano-TiO_2) Mitigates NaCl Stress by Enhancing Antioxidative Enzymes and Accumulation of Compatible Solutes in Tomato (*Lycopersicon esculentum* Mill.). J. Plant Sciences. 11, 1-11.

Formatted: English (United States)

Neves V.M., Heidrich G.M., Rodrigues E.S., Enders M.S.P., Muller E.I., Nicoloso F.T., Carvalho H.W.P. De, Dressler V.L. 2019. La_2O_3 Nanoparticles: Study of Uptake and Distribution in *Pfaffia glomerata* (Spreng.) Pedersen by LA-ICP-MS and μ - XRF. Environ. Sci. Technol. 53, 10827−10834.

Oh E., Liu R., Nel A, Boeneman Gemill K., Bilal M., Cohen Y., Medintz I.L. 2016. Meta-analysis of cellular toxicity for cadmium-containing quantum dots. Nature Nanotech. 11, 479–486.

Pagano L., Servin A.D., De La Torre-Roche R., Mukherjee A., Majumdar S., Hawthorne J., Marmiroli M., Maestri E., Marra R.E., Isch S.M., Dhankher O.P., White J. C., Marmiroli N. 2016. Molecular Response of Crop Plants to Engineered Nanomaterials. Environ. Sci. Technol. 50 (13), 7198−7207.

Pagano L., Pasquali F., Majumdar S., De La Torre-Roche R., Zuverza-Mena N., Villani M., Zappettini A., Marra R.E., Isch S.M., Marmiroli M., Maestri E., Dhankher O.P., White J.C., Marmiroli N. 2017. Exposure of *Cucurbita pepo* to binary combinations of engineered nanomaterials: Physiological and molecular response. Environ. Sci.: Nano. 4, 1579–1590.

Pagano L., Maestri E., White J.C., Marmiroli N., Marmiroli M. 2018. Quantum dots exposure in plants: Minimizing the adverse response. COESH. 6, 71–76.

Pagano L., Rossi R., Paesano L., Marmiroli N., Marmiroli M. 2021. miRNA regulation and stress adaptation in plants. Env. Exp. Bot. 104369.

Pagano L., Marmiroli M., Villani M., Magnani J., Rossi R., Zappettini A., White J.C., Marmiroli N. 2022. Engineered nanomaterial exposure affects organelle genetic material replication in *Arabidopsis thaliana.* ACS Nano. 16, 2249–2260.

Prado de Moraes A.C., Ribeiro L. da S., de Camargo E.R., Lacava P.T. 2021. The potential of nanomaterials associated with plant growth-promoting bacteria in agriculture. 3 Biotech. 11, 1–17.

Proux O., Lahera E., Del Net W., Kieffer I., Rovezzi M., Testemale D., Irar M., Thomas S., Aguilar-Tapia A., Bazarkina E.F., Prat A., Tella M., Auffan M., Rose J., Hazemann J.L. 2017. High-Energy Resolution Fluorescence Detected X-Ray Absorption Spectroscopy: A Powerful New Structural Tool in Environmental Biogeochemistry Sciences. J Environ Qual. 46, 1146-1157.

Puri A., Lepore G.O., d'Acapito F. 2019. The New Beamline LISA at ESRF: Performances and Perspectives for Earth and Environmental Sciences. Condensed Matter. 4, 12.

Rawat S., Pullagurala V.L.R., Adisa I.O., Wang Y., Peralta-Videa J.R., Gardea-Torresdey J.L. 2018. Factors affecting fate and transport of engineered nanomaterials in terrestrial environments, COESH, 6, 47-53.

Rincon A.M. 2019. Chapter 6 - Presence of nanomaterials on consumer products: food, cosmetics, and drugs. pp. 165-181. Marmiroli N., White J.C., Song J., Eds: In Micro and Nano Technologies, Exposure to Engineered Nanomaterials in the Environment, Elsevier, Amsterdam, The Netherlands.

Rizwan M., Ali S., Ali B., Adrees M., Arshad M., Hussain A., Zia ur Rehman M., Waris A.A. 2019. Zinc and iron oxide nanoparticles improved the plant growth and reduced the oxidative stress and cadmium concentration in wheat. Chemosphere. 214, 269–277.

Rodrigues E.S., Montanha G.S., de Almeida E., Fantucci H., Santos R.M., de Carvalho H.W.P. 2021. Effect of nano cerium oxide on soybean (*Glycine max* L. Merrill) crop exposed to environmentally relevant concentrations. Chemosphere. 273, 128492.

Rossi L., Zhang W., Schwab A.P., Ma X. 2017. Uptake, Accumulation, and in Planta Distribution of Coexisting Cerium Oxide Nanoparticles and Cadmium in *Glycine max* (L.) Merr. Environ. Sci. Technol. 51, 12815−12824.

Roubeau Dumont E., Elger A., Azéma C., Castillo H., Surble S., Larue C. 2022. Cutting-edge spectroscopy techniques highlight toxicity mechanisms of copper oxide nanoparticles in the aquatic plant *Myriophyllum spicatum*. Sci. Total Environ. 803, 150001.

Rui Y., Zhang P., Zhang T., Ma Y., He X., Gui X., Li Y., Zhang J., Zheng L., Chu S., Guo Z., Chai Z., Zhao Y., Zhang Z. 2015. Transformation of ceria nanoparticles in cucumber plants is influenced by phosphate, Environmental Pollution. 198, 8-14.

Ruotolo R., Maestri E., Pagano L., Marmiroli M., White J.C., Marmiroli N. 2018. Plant response to metal-containing engineered nanomaterials: an omics-based perspective. Environ Sci Technol. 52, 5, 2451-2467.

Sabo-Attwood T., Unrine J.M., Stone J.W., Murphy C.J., Ghoshroy S., Blom D., Bertsch P.M., Newman L.A. 2011. Uptake, distribution and toxicity of gold nanoparticles in tobacco (*Nicotiana xanthi*) seedlings. Nanotoxicology. 6(4), 353-360.

Sarret G., Pilon Smits E.A.H., Castillo Michel H., Isaure M.P., Zhao F.J., Tappero R. 2013. Chapter One - Use of Synchrotron-Based Techniques to Elucidate Metal Uptake and Metabolism in Plants, Adv. Agron. 119, 1–82.

Schwab F., Zhai G., Kern M., Turner A., Schnoor J.L., Wiesner M.R. 2016. Barriers, pathways and processes for uptake, translocation and accumulation of nanomaterials in plants – Critical review. Nanotoxicology. 10, 257−278.

Semida W.M., Abdelkhalik A., Mohamed G.F., Abd El-Mageed T.A., Abd El-Mageed S.A., Rady M.M., Ali E.F. 2021. Foliar application of zinc oxide nanoparticles promotes drought stress tolerance in eggplant (*Solanum melongena* L.). Plants. 10, 1–18.

Servin A.D., Castillo-Michel H., Hernandez-Viezcas J.A., Corral Diaz B., Peralta-Videa J.R., Gardea-Torresdey J.L. 2012. Synchrotron Micro-XRF and Micro-XANES Confirmation of the Uptake and Translocation of TiO2 Nanoparticles in Cucumber (*Cucumis sativus*) Plants. Environ. Sci. Technol. 46, 14, 7637–7643.

Servin A.D., Morales M.I., Castillo-Michel H., Hernandez-Viezcas J.A., Munoz B., Zhao L., Nunez J.E., Peralta-Videa J.R., Gardea-Torresdey J.L. 2013. Synchrotron Verification of TiO2 Accumulation in Cucumber Fruit: A Possible Pathway of TiO2 Nanoparticle Transfer from Soil into the Food Chain. Environ. Sci. Technol. 47, 20, 11592–11598.

Servin A.D., Pagano L., Castillo-Michel H., De la Torre-Roche R., Hawthorne J., Hernandez-Viezcas J.A., Loredo-Portales R., Majumdar S., Gardea-Torresday J.L., Dhankher O.P., White J.C. 2017a. Weathering in soil increases nanoparticle CuO bioaccumulation within a terrestrial food chain. Nanotoxicology. 11, 98−111.

Servin A.D., De la Torre-Roche R., Castillo-Michel H., Pagano L., Hawthorne J., Musante C., Pignatello J., Uchimiya M., White J.C. 2017b. Exposure of agricultural crops to nanoparticle CeO2 in biochar-amended soil. Plant Physiology and Biochemistry. 110, 147-157.

Siddiqi K.S., Husen A. 2017. Engineered Gold Nanoparticles and Plant Adaptation Potential. Nanoscale Res Lett. 11, 400-409.

Song U., Jun H., Waldman B., Roh J., Kim Y., Yi J., Lee E.J. 2013. Functional analyses of nanoparticle toxicity: a comparative study of the effects of TiO2 and Ag on tomatoes (*Lycopersicon esculentum*). Ecotoxicol. Environ. Saf., 93, 60-67.

Stegemeier J.P., Schwab F., Colman B.P., Webb S.M., Newville M., Lanzirotti A., Winkler C., Wiesner M.R., Lowry G.V. 2015. Speciation Matters: Bioavailability of Silver and Silver Sulfide Nanoparticles to Alfalfa (*Medicago sativa*). Environ Sci Technol. 49 (14), 8451-8460.

Syu Y., Hung J.H., Chen J.C., Chuang H. 2014. Impacts of size and shape of silver nanoparticles on Arabidopsis plant growth and gene expression. Plant Physiol. Biochem. 83, 57-64.

Tamez C., Hernandez-Molina M., Hernandez-Viezcas J.A., Gardea-Torresdey J.L. 2019. Uptake, transport, and effects of nano-copper exposure in zucchini (*Cucurbita pepo*). Sci. Total Environ. 665, 100-106.

Verma K.K., Song X.-P., Joshi A., Tian D.-D., Rajput V.D., Singh M., Arora J., Minkina T., Li Y.-R. 2022. Recent Trends in Nano-Fertilizers for Sustainable Agriculture under Climate Change for Global Food Security. Nanomaterials. 12, 173.

Formatted: Font: Italic

Formatted: English (United States)

Wang J., Koo Y., Alexander A., Yang Y., Westerhof S., Zhang Q., Schnoor J.L., Colvin V.L., Braam J., Alvarez P.J.J. 2013. Phytostimulation of poplars and Arabidopsis exposed to silver nanoparticles and Ag+ at sublethal concentrations. Environ. Sci. Technol. 47, 5442–5449.

Wang Y., Lin Y., Xu Y., Yin Y., Guo H., Du W. 2019. Divergence in response of lettuce (var. ramosa Hort.) to copper oxide nanoparticles/microparticles as potential agricultural fertilizer. Environ. Pollut. Bioavailab. 31, 80–84.

Wang Y., Deng C., Cota-Ruiz K., Tan W., Reyes A., Peralta-Videa J.R., Hernandez-Viezcas J.A., Li C., Gardea-Torresdey J.L. 2021a. Effects of different surface-coated nTiO2 on full-grown carrot plants: Impacts on root splitting, essential elements, and Ti uptake. J Haz Mater, 402, 123768.

Wang Y., Deng C., Cota-Ruiz K., Peralta-Videa J.R., Hernandez-Viezcas J.A., Gardea-Torresdey J.L. 2021b. Soil-aged nano titanium dioxide effects on full-grown carrot: Dose and surface-coating dependent improvements on growth and nutrient quality. Scie Tot Environ, 774, 145699.

Wang Y., Deng C., Elmer W.H., Dimkpa C.O., Sharma S., Navarro G., Wang Z., LaReau J., Steven B.T., Wang Z., Zhao L., Li C., Parkash Dhankher O., Gardea-Torresdey J.L., Xing B., White J.C. 2022. Therapeutic Delivery of Nanoscale Sulfur to Suppress Disease in Tomatoes: In Vitro Imaging and Orthogonal Mechanistic Investigation. ACS Nano, 16, 7, 11204–11217.

White J.C., Zuverza-Mena N., Elmer W.H. 2022. From nanotoxicology to nano-enabled agriculture: Following the science at the Connecticut Agricultural Experiment Station (CAES). Plant Nano Biology, 1, 100007. Doi: 10.1016/j.plana.2022.100007.

Formatted: English (United States)

Willett W., Rockström J., Loken B., Springmann M., Lang T., Vermeulen S., Garnett T., Tilman D., DeClerck F., Wood A., Jonell M., Clark M., Gordon L.J., Fanzo J., Hawkes C., Zurayk R., Rivera J.A., De Vries W., Sibanda L.M., Afshin A., Chaudhary A., Herrero M., Agustina R., Branca F., Lartey A., Fan S., Crona B., Fox E., Bignet V., Troell M., Lindahl T., Singh S., Cornell S.E., Reddy K.S., Narain S., Nishtar S., Murray C.J.L. 2019. Food in the Anthropocene: the EAT–Lancet Commission on healthy diets from sustainable food systems. Lancet. 393, 447–492.

Xiao Z., Yue L., Wang C. Chen F., Ding Y., Liu Y., Cao X., Chen Z., Rasmann S., Wang Z. 2021. Downregulation of the photosynthetic machinery and carbon storage signaling pathways mediate La_2O_3 nanoparticle toxicity on radish taproot formation. J. Hazard. Mater. 411, 124971.

Xiong Z., Zhang T., Xian Y., Kang Z., Zhang S., Dumat C., Shahid M., Li S. 2021. Foliar uptake, biotransformation, and impact of CuO nanoparticles in *Lactuca sativa* var. ramosa Hort. Environ. Geochem. Health. 43(1), 423-439.

Xu T., Wang Y., Aytac Z., Zuverza-Mena N., Zhao Z., Hu X., Ng K.W., White J.C., Demokritou P. 2022. Enhancing Agrichemical Delivery and Plant Development with Biopolymer-Based Stimuli Responsive Core–Shell Nanostructures. ACS Nano 16, 4, 6034–6048.

Yang J., Jiang F., Ma C., Rui Y., Rui M., Adeel M., Cao W., Xing B. 2018. Alteration of Crop Yield and Quality of Wheat upon Exposure to Silver Nanoparticles in a Life Cycle Study. J. Agric. Food Chem. 66, 2589–2597.

Yin L., Cheng Y., Espinasse B., Colman B.P., Au M., Wiesner M., Rose J., Liu J., Bernhardt E.S. 2011. More than the Ions: The Effects of Silver Nanoparticles on *Lolium multiflorum*. Environ. Sci. Technol. 45, 2360–2367.

Formatted: Italian (Italy)

Yue L., Chen F., Yu K., Xiao Z., Yu X., Wang Z., Xing B. 2019. Early development of apoplastic barriers and molecular mechanisms in juvenile maize roots in response to La_2O_3 nanoparticles. Sci. Total Environ. 653, 675–683.

Zafar S, Perveen S, Kamran Khan M, Shaheen MR, Hussain R, Sarwar N, Rashid S., Nafees M., Farid G., Alamri S., Shah A.A., Javed T., Irfan M., Siddiqui M.H. 2022. Effect of zinc nanoparticles seed priming and foliar application on the growth and physio-biochemical indices of spinach (*Spinacia oleracea* L.) under salt stress. PLoS ONE, 17(2), e0263194.

Zhong Z., Zhu L., Young S. 2020. Approximation Framework of Embodied Energy of Safety: Insights and Analysis. Energies. 13, 4230.

Zulfiqar F., Navarro M., Ashraf M., Akram N.A., Munné-Bosch S. 2019. Nanofertilizer Use For Sustainable Agriculture: Advantages And Limitations. Plant Science. 289, 110270.

Zuverza-Mena N., Armendariz R., Peralta-Videa J.R., Gardea-Torresdey J.L. 2016. Effects of silver nanoparticles on radish sprouts: Root growth reduction and modifications in the nutritional value. Front. Plant Sci. 7, 1–11.

Zuverza-Mena N., Martínez-Fernandez D., Du W., Hernandez-Viezcas J.A., Bonilla-Bird N., Lopez-Moreno M.L., Komarek M., Peralta-Videa J.R., Gardea-Torresdey J.L. 2017. Exposure of engineered nanomaterials to plants: insights into the physiological and biochemical responses-A review. Plant Physiol. Biochem. 110, 236-264.

Figure captions and Tables

Figure 1. Schematic representation of principal effects emerging after biotransformation of ENMs in soil, on foliar surface and within the plant tissues. ENMs in soil, due to particle and soil physico-chemical interactions, may remain unmodified, or may undergo to potential dissolution (with ions release), or undergo homo-/hetero-aggregation, which may highly influence particle stability and potential bioavailability (and consequently their uptake). On the foliar surface, temperature and light may also affect particle stability before uptake into the leaf tissues. Once within the plant, ENMs pristine, or modified, can interact with several biomolecule types (peptides, sugars, lipids, nucleic acids, secondary metabolites) leading to phenomena such as coating, enzymatic degradation, chelation or functionalization, which may influence the biotransformed particle at level of translocation, storage or reactivity. These parameters may also influence the interaction within the plant cell, triggering differential responses (*e.g.*, toxicity, oxidative stress, ROS production), which may be indirectly measured by physiological and molecular assays, but directly observed through physical strategies, including synchrotron-based methods.

Figure 2~~1~~. Principal ~~mechanisms~~ effects of ENM biotransformation in plant and relevant biomarkers observed in different plant species from model organisms (*A. thaliana*) to crops (*C. pepo*; *S. lycopersicum*; *G. max*) and different tissues (roots, leaves and flowers/pollen). Relevant ENM parameters such as size, stability, dissolution may influence the translocation from roots to shoots. Potential biotransformation mechanisms that may occur within plant tissues are also reported: enzymatic degradation, protein functionalization, functionalization at the level of cytoplasm and organelles (organic acids, thiol-containing compounds, aminoacids, sugars, secondary metabolites).

In this scenario, chloroplast become not only a in important actor in the energy production but also one of the key targets and main regulators involved in the ENM exposure and response. Details on the biomarkers generated are reported in Table 1.

Table 1. Genes as potential biomarkers of exposure/effect observed in roots, leaves and pollen, in different plant species (reported in Figure 2). Genes reported cannot be considered only as modulated in the different plant organs by the different type of ENMs, but also they showed a nano-specificity during the ENM response. It is also important to observe how, depending on the ENM type, biotransformation, and as indirect consequence, the transcriptomic response can be convergent between different forms (nano, bulk, ion) of the same element (see Figure 2).~~Table 1. Gene list of potential biomarkers observed in roots, leaves and pollen, in different plant species (reported in Figure 1).~~

flower & pollen					
plant	**gene**	**function**	**pathway**	**ENM**	**reference**
Cucurbita pepo L.	Cp4.1LG00g07430	Beta-galactosidase	primary metabolism	nCuO	Marmiroli *et al.*, 2021
	Cp4.1LG13g06380	Pectinesterase	primary metabolism		
	Cp4.1LG12g04750	Phosphatidylinositol 3-/4-kinase family protein	primary metabolism		
	Cp4.1LG03g02560	Delta-1-pyrroline-5-carboxylate synthetase	primary metabolism		
	Cp4.1LG02g07240	Leucine-rich repeat family protein	signaling, stress response		

	Cp4.1LG02g12750	Protein EFR3 like	signaling		

leaf					
plant	**gene**	**function**	**pathway**	**ENM**	**reference**
Cucurbita pepo L.	Cp4.1LG01(*)	PSBN, photosystem II reaction center protein N	chloroplast electron transport	nCeO2 nLa2O3 nCuO nZnO CdS QD	Pagano *et al.*, 2016 Pagano *et al.*, 2017
	Cp4.1LG00(*)	PetL, component of Cytochrome b6f	chloroplast electron transport		
Solanum lycopersicum L.	Solyc09g074540	PetL, component of Cytochrome b6f	chloroplast electron transport	nCeO2 nLa2O3 nCuO	Pagano *et al.*, 2016
Glicine max L.	Glyma12g36130	PetL, component of Cytochrome b6f	chloroplast electron transport	CdS QD	Majumdar *et al.*, 2019
Arabidopsi thaliana L.	AtCg00590	PetL, component of Cytochrome b6f	chloroplast electron transport	CdS QD	Marmiroli *et al.*, 2014
	AtCg00270	PSBN, photosystem II reaction center protein N	chloroplast electron transport		

root					
plant	**gene**	**function**	**pathway**	**ENM**	**reference**
Cucurbita pepo L.	Cp4.1LG16g08630	BIP3, Heat shock protein 70 family protein	protein folding, stress response	nCeO2 nLa2O3 nCuO nZnO CdS QD	Pagano *et al.*, 2016 Pagano *et al.*, 2017
	Cp4.1LG00g00090	GPT2, glucose-6-phosphate/phosphate translocator	primary metabolism		
	Cp4.1LG05g08050	RPS12, ribosomal protein S12A	protein synthesis		
	Cp4.1LG05g11200	PLP2, phospholipase	biotic/abiotic stress response		
Solanum lycopersicum L.	Solyc08g006150	ChaC-like family protein	glutathione degradation	nCeO2 nLa2O3 nCuO	Pagano *et al.*, 2016
	Solyc03g081240	PRR5, pseudo-response regulator 5	biotic/abiotic stress response		
	Solyc10g005080	LHY1, Homeodomain-like superfamily protein	stress response		
Glicine max L.	Glyma19g45030	LHY1, Homeodomain-like superfamily protein	stress response	CdS QD	Majumdar *et al.*, 2019
	Glyma15g06800	PR1, pathogenesis-related gene 1	biotic/abiotic stress response		

Table 2. Principal evidence of the ENM biotransformation in plant observed by physiological, molecular and synchrotron-based analyses.

ENM	**plant**	**physiological response**	**molecular response**	**techniques**	**biotransformation**	**reference**

nCeO2	*Cucumis sativus L.*	nCeO2 exposure had no significant effects on the biomass production under both the +P and -P conditions. However, the uptake of Ce in the plants is different under the two conditions	-	TEM XANES NEXAFS	high stability modified redox state, from Ce(IV) to Ce(III) low translocation from roots to shoots	*Rui et al., 2015*
	Lactuca sativa L. *Cucurbita pepo L.* *Zea mays L.* *Glycine max L.*	biomass in the agricultural soil amended with biochar 600°C was largely unaffected	-	SEM µ-XRF µ-XANES		*Servin et al., 2017*
nCeO2 nZnO	*Glycine max L.*	-	-	µ-XRF µ-XANES		*Hernandez-Viezcas et al., 2013*
nCeO2 nLa2O3	*Cucumis sativus L.*	nCeO2 had no phytotoxicity to cucumber at all tested concentrations, while nLa2O3 showed significant inhibition on root elongation, shoot elongation, root biomass, and shoot biomass, as well as induced more reactive oxygen species and cell death in roots	-	µ-XRF XAS	higher dissolution compared to nCeO2 moderate translocation from roots to shoots	*Ma et al., 2014*
nTiO2	*Cucumis sativus L.*	at all concentrations, nTiO2 significantly increased root length (average >300%)	-	µ-XRF µ-XANES	high stability low translocation from roots to shoots	*Servin et al., 2012*
	Cucumis sativus L.	In nTiO2treated plants, the chlorophyll content in leaves increased as the external concentration of NPs increased. nTiO2 treatments increased CAT activity in leaves.	-	µ-XRF µ-XANES FTIR		*Servin et al., 2013*
nAu	*Nicotiana tabacum L.*	leaf necrosis was observed after 14 days ofexposure to 3.5 nm nAu	-	µ-XRF	high stability no changes in Au valence	*Sabo-Attwood et al., 2012*
nAg	*Lolium multiflorum L.*	nAg and ionic silver significantly reduced growth, resulting in shorter shoots and roots and lower biomass. The growth inhibition from nAg was stronger than that from AgNO3. Higher concentrations of AgNPs caused broken epidermis and rootcap. Cell structures were unaltered in AgNO3 treated roots.	-	µ-XRF XANES	low stability high translocation from roots to shoots	*Yin et al., 2011*
	Lactuca sativa L. *Cucurbita pepo L,* *Zea mays L.* *Glycine max L.*	fresh foliar biomass was unchanged. Chlorophyll a, chlorophyll b, carotenoid and pheophytin contents were not affect	-	SEM µ-XRF XANES		*Larue et al., 2013*
	Medicago sativa L.	-	-	TEM XRF		*Stegemeier et al., 2015*
nZVI	*Cucumis sativus L.*	nZVI treatments did not affected the biomass of plants in hydroponic or soil systems. Only nZVI treated plant shoots grown under hydroponic conditions exhibited increased biomass (15%). Chlorosis observed in the leaves of the control plants but not in the plants treated with nZVI	ATPase isoforms increased their expression in the roots of plant exposed to nZVI.	EXAFS	low stability limited translocation from roots to shoots modified particle structure	*Dwivedi et al., 2018*

Table 2 continue in the next page…

ENM	***plant***	**physiological response**	**molecular response**	**techniques**	**biotransformation**	**reference**
nZnO	*Zea Mays L.*	-	-	µ-XRF XANES	low stability	*Lv et al., 2015*

	Zea Mays L.	By the 7th day, the treatment of 9 nm nZnO and ZnSO4 significantly reduced the dry weight of roots by 44% and 58% respectively, compared to the unexposed control plants. In general, ZnSO4 treatment had the greatest effect on root biomass, followed by 9 nm nZnO and finally 40 nm nZnO	-	µ-XRF	high translocation from roots to shoots	*Lv et al., 2021*
nCuO	*Nicotiana tabacum L.*	When exposed to equivalent weight of Cu, nCu2O exhibited higher toxicity than nCuO, implying that the transformation may elevate the toxicity upon nCuO exposure	-	TEM XANES	low stability high translocation from roots to shoots consistent with an increased ion release modified redox state, from Cu(II) to Cu (I)	*Dai et al., 2019*
	Lactuca sativa L.	Cu exposure had limited impacts on lettuce biomass. For the unweathered exposures, only the root biomass of NP-exposed plants was less than in bulk treatment; no other tissue- specific differences were evident. In the W exposure, the total biomass ranged from 8.2 g (W NP) to 9.5 g (unexposed control); nCuO and ion-treated plant biomass was significantly less than the unexposed controls. With regard to individual tissues in the W exposure, there were no differences of significance in the root biomass.	The expression level of nine genes involved in Cu transport shows that the mechanisms of nCuO and bulk CuO response-accumulation are different from ionic Cu	µ-XRF XANES		*Servin et al., 2017*
	Cucurbita pepo L.	no impact on zucchini biomass, photosynthetic activity or cellular respiration.	RNA-seq analyses on vegetative and reproductive tissues highlighted common and nanoscale-specific components of the response. Mitochondrial and chloroplast functions were uniquely modulated in response to ENM exposure as compared with bulk and salt forms	µ-XRF XANES EXAFS		*Marmiroli et al., 2021*
CdS QD	*Arabidopsis thaliana L.*	treatment with CdS QDs caused a slight stress that increased the biomass in the mutants, but not in the wt, while CdSO4 caused modest phytotoxicity to both the wt and mutants	-	EXAFS	high stability limited ion release high translocation modification in bonds distance	*Marmiroli et al., 2020*

Nanomaterials biotransformation: In planta mechanisms of action

Luca Pagano,[1] Riccardo Rossi,[1,2] Jason C. White,[3] Nelson Marmiroli,[1,4] Marta Marmiroli[1,5*]

[1], Department of Chemistry, Life Sciences and Environmental Sustainability, University of Parma, 43124 Parma, Italy.

[2], Centro Interdipartimentale per l'Energia e l'Ambiente (CIDEA), University of Parma, 43124 Parma, Italy.

[3], The Connecticut Agricultural Experiment Station, New Haven, Connecticut 06504, United States.

[4], Consorzio Interuniversitario Nazionale per le Scienze Ambientali (CINSA), University of Parma, 43124 Parma, Italy.

[5], Interdepartmental Centre for Food Safety, Technologies and Innovation for Agri-food (SITEIA.PARMA), 43124 Parma, Italy.

*, corresponding author: marta.marmiroli@unipr.it.

Abstract

Research on engineered nanomaterials (ENMs) exposure has continued to expand rapidly, with a focus on uncovering the underlying mechanisms. The EU largely limits the number and the type of organisms that can be used for experimental testing through the 3R normative. There are different routes through which ENMs can enter the soil-plant system: this includes the agricultural application of sewage sludges, and the distribution of nano-enabled agrochemicals. However, a thorough understanding of the physiological and molecular implications of ENMs dispersion and chronic low-dose exposure remains elusive, thus requiring new evidence and a more mechanistic overview of pathways and major effectors involved in plants. Plants can offer a reliable alternative to conventional model systems to elucidate the concept of ENM biotransformation within tissues and organs, as a crucial step in understanding the mechanisms of ENM-organism interaction. To facilitate the

understanding of the physico-chemical forms involved in plant response, synchrotron-based techniques have added new potential perspectives in studying the interactions between ENMs and biota. These techniques are providing new insights on the interactions between ENMs and biomolecules. The present review discusses the principal outcomes for ENMs after intake by plants, including possible routes of biotransformation which make their final fate less uncertain, and therefore require further investigation.

Keywords: biotransformation, plant, nanomaterials, synchrotron-based analyses, molecular response

Highlights

- Biotransformation is a fundamental phenomenon for understanding ENM-organism response mechanisms
- Synchrotron-based methodological analyses are critical for investigating ENM biotransformation
- Biotransformation of ENMs may have positive or negative effects when considering the agri-food application

1. Engineered nanomaterial (ENM) biotransformation

1.1. ENMs: from exposure to biotransformation

Although global food production has generally increased over time, the distribution has been far from equitable, with more than 820 million people having insufficient food and many more consuming low-quality diets leading directly to micronutrient deficiencies (Willett et al 2019; Zhong et al., 2020). In the past 20 years, and particularly in the past decade, engineered nanomaterials (ENMs) have seen dramatically increasing use and had an equally significant impact on ecosystems services and human society. As such, studies focused on the implications associated with their use are critical. In fact, it

is known that ENMs exert important, but not completely understood, effects on biota; a particular topic of concern include the effect on crops, food production, and trophic transfer (Gardea-Torresdey et al., 2014; Ma et al., 2018; White et al., 2022).

The interplay between plant growth, dissolution, evaporation, and aggregation are key aspects of the dynamic behavior of ENMs in the environment. Directional aggregation can result in the formation of larger particles with a more complex morphology. However, given the complexity of natural environments, most nanomaterials can be found in hetero-aggregated composites of different inorganic and organic materials (Judy et al., 2012; Ma et al 2018). These aggregates can be very different from original simple pristine morphologies and may even form highly branched structures similar to fractals, all of which subsequently dramatically affect their reactivity and transport (Ma et al., 2018; Huangfu et al., 2019).

Sectors with a large nanomaterial application such as medicine and food production may experience greater risks of ENMs exposure due to their uses, with thousands of tons of ENMs that are eventually discarded into the three main environmental matrices: soil, water, and air (Keller et al., 2013; Zuverza-Mena et al., 2017). ENMs with the greatest historical use include nanoscale ceria ($nCeO_2$), silica ($nSiO_2$), titania ($nTiO_2$), as well as nanoscale copper oxide (nCuO), zinc oxide (nZnO) and nanosilver (nAg), and as such, release in the environment has been investigated (Keller & Lazareva, 2014; Mitrano et al., 2015). Considering the long-time span of use of select materials (1950 to 2050), efforts to estimate ENMs release through commercial and associated activity into the environment have been undertaken. For example, for $nSiO_2$, a global production between 100,000 and three million tons per year has been estimated, while for $nCeO_2$, levels likely reach the upper limit of 10,000 tons per year, and for nAg, the literature reflects a production volume below 1,000 tons per year (Giese et al., 2018). The use of $nTiO_2$ for the inhibition of microbial proliferation in food is one of the most important ways to prolong the shelf life of packaged products (Abutalib & Rajeh., 2020). However, a panel from EFSA concluded that E171 (TiO_2) can no longer be considered as safe when used as a food additive (EFSA Journal 2021).

Gottschalk et al., (2009) calculated environmental concentrations using a probabilistic LCA (life cycle analysis) of ENM containing products. The authors modelled $nTiO_2$, nZnO, nAg, carbon nanotubes (CNT), and fullerenes for the U.S., Europe, and Switzerland. The concentrations in the environment were calculated through probabilistic density functions and compared to ecotoxicology data. In the simulations, the values ranged from 0.003 ng L^{-1} (fullerenes) to 21 ng L^{-1} ($nTiO_2$) for surface waters and from 4 ng L^{-1} for fullerenes to 4 μg L^{-1} for $nTiO_2$ for sewage treatment effluents. In Europe and the U.S., ENMs increased annually in sludge treated soil, and ranged from 1 ng kg^{-1} for fullerenes to 89 μg kg^{-1} for $nTiO_2$ (Gottschalk et al. 2009; Keller et al., 2013; Keller & Lazareva, 2014; Rincon, 2019).

Importantly, quantum dots (QDs), as well as many carbon- and metal-based ENMs, have been shown to produce negative effects on animals and plants as a function of dose, including accumulation, alteration of physiological and biochemical parameters, and reduced growth or yield (Oh et al., 2016; Zuverza-Mena et al., 2017). Quantum dots have shown to enter plant roots and to damage the cell wall, dysregulating metabolism (Marmiroli et al., 2020). While mercaptoacetic acid (MAA)-coated CdSe/ZnS QDs induced minimal toxicity on maize seedlings, pristine cadmium/tellurium (Cd/Te) QDs induced chromatin stress, mitochondrial damage and inhibition on green gram sprouts (*Phaseolus radiatus* L.) growth (Song et al., 2013). There are several routes by which ENM can enter the soil-plant system. These include agricultural application of sewage sludges which often contain $nSiO_2$, $nTiO_2$, nZnO, and nAg; as well as the application of nano-enabled agrochemicals, resulting in the direct entry of $nSiO_2$, $nTiO_2$, nZnO, nFeOx, nCuO, CeO_2 and nAg into agricultural soils (Lv et al., 2019; Verma et al., 2022).

1.2. Conceiving and studying the ENM biotransformation

Environmental and soil physico-chemical characteristics may significantly impact on ENMs aggregation, and dissolution, which may modify ENM bioavailability, uptake, translocation, and accumulation into terrestrial plants. In fact, light and temperature may induce potential changes on

the ENM structure, such as during foliar spray (Hong et al., 2021). Once within plant tissues, ENM biotransformation may alter particle stability and behaviour in terms of interactions with biomolecules, triggering differential plant defense mechanisms (Ma et al., 2018; Rawat et al., 2018). ENMs are subject to a range of processes that may lead to their partial dissolution or result in structural modifications (Milosevic et al., 2020; Marmiroli et al., 2020). A schematic representation is reported in Figure 1. Nanoparticle biotransformation is a highly complex and poorly understood series of events and has been shown to occur during weathering in the soil, trophic transfer, and translocation within plant tissues. These reactions are highly dynamic and alter the original pristine structure of the nanoparticles in a number of ways, potentially causing the release of ions, but also the consequent restructuring (or destructuring) of the nanoparticle (Servin et al., 2017a). Biotransformation of nanomaterials may rest on the interaction with biological molecules that stabilize their external reactivity, such as peptides including those involved in detoxification, (*e.g.*, glutathione), fatty acids, secondary metabolites, and even components of cell membranes (Marmiroli et al., 2020). Particle properties such as size, stability, charge, and dissolution may strongly influence other biotransformation mechanisms, potentially promoting enzymatic modification and functionalization with proteins (*e.g.*, corona protein) present in the cytoplasm and organelles (Ma et al., 2018; Marmiroli et al., 2020). ENMs may maintain crystal structure when internalized by cells or may be disassembled and converted into less complex structures (by biological modification or chelation), thus reducing toxicity, and the risk of their accumulation and translocation (Wang et al., 2022). These post-uptake structural modifications involve specific parameters such as bond distance with other atoms or nature of the ligand atoms. In consideration of this, one objective in biotransformation studies is to investigate the physico-chemical forms (*e.g.*, nanocrystal structure) within exposed tissues and to characterize the structural differences within the new biotransformed molecules, including identification of the biomolecules interacting with the ENMs (Castillo-Michel et al., 2017; Marmiroli et al., 2020). It has furthermore to consider how genetic diversity across different plant species and within the same plant species (in different cultivars) may influence the

ENM uptake and translocation (Deng et al., 2020). Some of the more interesting discoveries on the biotransformation and localization of metal based-ENMs into plants have been achieved with to the synchrotron-based techniques of imaging, elemental speciation, and atomic neighbors' identification. This transformation will be also influenced by the environment, these reactions of the same particle will be different on the leaf surface, in the mesophyll, in the vascular tissue, in different organelles, in the roots and in the rhizosphere (Sarret et al. 2013; Castillo-Michel et al., 2017).

Micro-X-Ray Fluorescence (μ-XRF) and micro-X-Ray Adsorption Spectroscopy (μ-XAS) K-, L- or L_{III}-edge EXAFS and XANES spectra have be used to study the biotransformation of coated nanomaterials present in plants and soil (Lopez-Moreno et al., 2010; Judy et al., 2012). μ-XRF is used for qualitative elemental analysis of heterogeneous biological samples. The interaction of the sample with high-energy X-ray radiation, which leads to X-ray absorption and emission of the fingerprint X-ray spectra for each element, is the key feature of this powerful analytical method. The absorption/excitation effect and relaxation process lead to atoms emitting fluorescence photons characterized by elemental specific energy (Chebakova et al., 2021). Extended X-ray absorption fine structure (EXAFS) is a technique that utilizes oscillations of the X-ray absorption coefficient on the high-energy side of an absorption edge. Such oscillations can reach up to 1000 eV above the edge and may have a magnitude of 10% or more. In addition, it is necessary to consider that atoms are not stationary. Thermal vibrations will obscure the EXAFS oscillations, and in the harmonic approximation, this can be accounted for by considering a Debye-Waller-type term. This led to a great improvement in the theoretical understanding of EXAFS and it is now established that a single scattering short-range order theory is adequate under most circumstances (Gurman, 1995). In addition, electrons that have undergone inelastic losses will not interference in the process. This is considered by an exponential damping term. It is the limited range of the photoelectrons in the energy region of interest 50-1000 eV that allows for a short-range order description of EXAFS also in crystalline materials (Gurman, 1995). The region which includes the pre-edge, edge-jump and post-edge to approximately 30-50 eV is referred to as the X-ray Absorption Near Edge Structure

(XANES), which describes the structural component of the X-ray absorption near-edge as an extension of the EXAFS, largely due to the long mean free path of the photoelectron and the dominance of high order multiple scattering contributions (Gräfe et al., 2014).

Synchrotron-based techniques use photons, which do not have mass; therefore the factor 1.22 is substituted by the non-relativistic mass of the electron which is $m=5.485\cdot10^{-4}$ Da. This makes the resolution even smaller and increases penetration depth into the sample. On the other hand, EDX depends on the acceleration voltage of the particle or of the photon. Every element has its own orbital energies, and the acceleration voltage allows excitation one or more of these, independently if it comes from a TEM or from a synchrotron (Goldstein et al., 2003).

From the perspective of application, μ-XRF can provide information on the presence and localization of specific elements within tissues, while XANES and EXAFS spectroscopy can provide information related to the valence state and coordination environment of the element of interest, as well as the molecular species present in the sample. The use of μ-XRF and μ-XANES for the analysis of nanoparticles in plants have been thoroughly reviewed by Castillo-Michel et al. (2017).

Importantly, these powerful methodologies open the possibility to mechanistically address many important environmental issues, such as the chemical activities of environmental pollutants, to trace environmental elemental cycles, element speciation in complex matrices, and to characterize the natural/anthropogenic complex matrixes that are not amendable for standard analytical and structural analyses (Puri et al., 2019). In many synchrotrons around the world, there is increasing use of dedicated beamlines to study environmental and plant tissues exposed to contaminants such as ENMs (Proux et al., 2017; d'Acapito et al., 2019).

The present review aims to describe the current understanding of metal based-ENMs biotransformation mechanisms in plants and focuses on correlating available physiological and molecular data with the information obtained by synchrotron-based techniques. This evaluation not only highlights biotransformation as one of the major driving forces mediating the biological effects

of ENMs on plants, but also offers some perspective on intentional and safer-by-design strategies that can ensure more sustainable application of these materials. Moreover, the study on plants is instrumental to the application of the REACH normative within European Union for toxicological and ecotoxicological studies (Replacement, Reduction and Refinement). Plants are higher eukaryotes, characterized by large nuclear genomes and organellar genomic information (within chloroplasts and mitochondria) that provide an effective model for many complex species (Chang et al., 2016).

2. Physiological and molecular effects as indirect evidence of ENM biotransformation in plants

The physiological behaviour and related molecular pathways of response are important to characterizing and understanding ENM biotransformation. An important part of this involves comparing the effects of a nanomaterial with that of the bulk and ionic counterparts, as well as by investigating different exposure times and by exposing different plant organs and tissues (Schwab et al., 2016; Marmiroli et al., 2021). Studies have added significant molecular data on the effects of ENMs exposure in plants (Schwab et al., 2016; Ma et al., 2018). Different results are often observed for the same element as a function of its form or size, *i.e.* nanostructured, bulk, or ionic species (Pagano et al., 2016; Wang et al., 2022). Detailed study of differential transcriptional regulation, protein abundance or metabolomic profiling (Huang et al., 2018; Majumdar et al., 2019; Gallo et al., 2021) are critical to demonstrating the nano-specificity of plant response. The study of organellar genome stability and the related stoichiometric variations during ENM treatment has also provided important mechanistic insight into plant to ENM exposure (Pagano et al., 2022). Advanced synchrotron-based techniques may either help to systematically understand the nano-bio interactions, with regard to physical and chemical reactions at the biomolecular surface: biomolecules may interact with ENMs, generating biomolecular corona, which change the ENM surface properties, and interfere with its functionality/reactivity (Hameed et al., 2022).

Regarding the physiological effects of ENMs on plants of agronomic interest, these studies have provided a better understanding of the specific properties of the ENMs that may enable sustainable use in the agrifood sector. Beyond the potential adverse effects upon bioaccumulation from soil or other exposure routes, there is an increasing interest in exploiting the potential positive effects of ENMs on plants, aiming to improve crop yields and quality. A range of mechanisms, including direct use as nanofertilizers (Verma et al., 2022), nanocarriers (Karny et al., 2018), smart delivery systems (Xu et al., 2022) or when in association to plant growth-promoting bacteria, are considered (Prado de Moraes et al., 2021). In addition, ENMs may act indirectly by protecting plants from biotic (*e.g.*, nanopesticides) or abiotic stressors (*e.g.*, wastewater and soil treatment) (Liu et al., 2015; Kah et al., 2018; Kumari et al., 2019). Due to the many variables involved, it is essential to obtain robust safety data regardless of the end use: ENM type, the modes and time of exposure, concentrations tested, and the plants used are all important considerations. Any recurring effects that occur under these different conditions are of particular interest and are explored below (see Figure 2 and Table 1). Table 2 summarizes the major outcomes related to metal based-ENM biotransformation in plants, including the principal mechanisms involved, and the major physiological and molecular insights observed from exposure.

2.1. Lanthanides based ENMs

Cerium Oxide ($nCeO_2$) has shown significant potential for agricultural applications, largely due to its properties as an ROS scavenger (Ma et al., 2015; Servin et al., 2017b). While CeO_2 as a bulk crystal mainly consists of Ce(IV), the reduction to $nCeO_2$ significantly enhances the relative amount of Ce(III), resulting in a higher catalytic effects comparable to the capabilities of a biological antioxidant (Eriksson et al., 2018). Servin et al. (2017b) used μ-XRF and μ-XANES to analyze the interactions between $nCeO_2$ and different biochars in soil, observing that much of the Ce remained in $nCeO_2$ form within the plant tissues. The dissolution rate of the nanoform can increase in acidic environments to generate Ce(III), as reported by Hernandez-Viezcas et al. (2013) who analyzed in *Glycine max* L. the

effects of $nCeO_2$ (1000 mg L^{-1}, 48d exposure). Results have been confirmed by Rui et al. (2015), who used XANES on exposed cucumber (*Cucumis sativus* L.) tissues (2000 mg L^{-1}, 21d exposure) to observe $nCeO_2$ association with phosphate. These properties highly impact not only reactivity but also $nCeO_2$ translocation. In zucchini (*Cucurbita pepo* L.), treated with 500 mg L^{-1} of $nCeO_2$, the nanoform is mainly present in the roots and stems, with limited translocation to the leaves (Pagano et al., 2016). However, co-contamination with other ENMs (*e.g.*, CdS QDs) under same experimental conditions resulted in increased translocation to the shoots from 1000 to 3000 mg kg^{-1} (Pagano et al., 2017). Similar results have been reported in several plant species: for example, Rossi et al (2017) $nCeO_2$ under co-exposure with ionic Cd in soybean (*Glycine max* L.) showed an altered (1-2 fold increased) translocation to the shoots. Interestingly, bulk CeO_2 translocation resulted similar to the nano-form, whereas ionic Ce was translocated in greater amounts to the shoots (Pagano et al., 2016). This analysis was supplemented with molecular data; the transcriptional profiles were evaluated in *C. pepo* and *S. lycopersicum* as a function of $nCeO_2$, nLa_2O_3 and nCuO exposure and were compared with bulk and ionic forms using a set of 38 genes based on the *A. thaliana* orthologs as potential biomarkers of exposure/effects (Marmiroli et al., 2014). The responses observed were generally different in term of up- or down-regulation as a function of Ce form (Pagano et al., 2016). Of particular interest are impacts on the chloroplast are the *PetL* and *PSBN* genes, which encode for a structural component of the cytochrome b_6f complex and low molecular weight protein located on thylakoid membrane as a component of the photosystem II (PSII), respectively (Figure 2, Table 1). These two chloroplastic genes were differentially expressed across nano-, bulk, and ionic forms. A similar trend was also evident for nLa_2O_3 and nCuO exposure scenarios. Interestingly, by analyzing the effects on chloroplast and mitochondrial genomes in *A. thaliana* in terms of copy number, the effects of $nCeO_2$ and $CeCl_3$ exposure were rather limited as compared to the untreated control, which agrees with the limited translocation to the shoots (Pagano et al., 2022). With regard to proteomic analysis, Majumdar et al. (2015) conducted a quantitative proteomic analysis of kidney beans (*Phaseous vulgaris* L.) seeds after $nCeO_2$ exposure and reported that the major seed proteins

associated with nutrient storage (phaseolin) and carbohydrate metabolism (lectins) were significantly reduced by $nCeO_2$ (62.5-500 mg kg^{-1}, 50d exposure) in a dose dependent manner. Interesting, the plants did not exhibit overt toxicity.

In fact, at the physiological level cerium-based nanoparticles generally do not produce phytotoxicity (Ma et al., 2015; Rui et al., 2014; Lizzi et al., 2020; Rodrigues et al., 2021), though some have highlighted a positive impact on biomass and on physiological indicators such as chlorophyll and photosynthesis at selected doses (Rossi et al., 2017; Gui et al., 2017). Another important aspect of $nCeO_2$ seems to involve enhance tolerance to saline stress, leading to improved phenotypic and enzymatic performances and ROS elimination in seeds priming (An et al., 2020; Liu et al., 2021; Hassanpouraghdam et al., 2022; Chen et al., 2022).

Compared to $nCeO_2$, nanoscale lanthanum oxide (nLa_2O_3) exhibits lower stability, increased ion dissolution, greater translocation from roots and shoots, all of which seems to lead to higher phytotoxicity. The limited stability of nLa_2O_3, as compared to $nCeO_2$, has been confirmed by μ-XRF analysis in *Cucumis sativus* L. through element speciation, dissolution studies in aqueous solution and *in planta*. After 14d treatment, the $nCeO_2$ structure in the roots remains mostly preserved (more than 80%) while pristine nLa_2O_3 structure was observed at levels below 10% (Ma et al., 2015).

Interestingly, co-contamination with $nCeO_2$ strongly reduces the uptake of nLa_2O_3 (Pagano et al., 2017). The different behaviour of the two ENMs was evident in the transcriptomic profile: only 7 out of 38 genes were commonly modulated between $nCeO_2$ and nLa_2O_3; these genes were involved in primary metabolic functions, protein synthesis and stress response (Pagano et al., 2016). Several publications using different model plants were compared, and the reported effects due to nLa_2O_3 exposure in soil include reduction in root and leaf biomass (Ma et al., 2015), decreased transpiration (Yue et al., 2019), decreased photosynthesis (Xiao et al., 2021) and reduced pigment concentration (Neves et al., 2019). The decrease in photosynthetic activity is also reflected by altered root morphology, including root cracking (Xiao et al., 2021) and the presence of apoplastic barriers (Yue et al., 2019). Interestingly, the adverse effect of nLa_2O_3 on plant biomass was alleviated under binary

exposure combinations with ENMs such as nCuO and nZnO (Pagano et al., 2017). As ideal case study, information on RedOx state and potential translocation of lanthanide-based nanoforms within plant tissues become fundamental in the mechanistic understanding on the physiological and molecular effects, with regard to application in the agrifood sector.

2.2. Titanium oxide ENM

Titanium dioxide ($nTiO_2$) has been largely studied as a potential environmental and agricultural contaminant (Servin et al., 2012; 2013). $nTiO_2$ has demonstrated a high stability, both in anatase and rutile crystal form (Servin et al., 2012). Translocation of $nTiO_2$ (0-750 mg kg^{-1}, 150d exposure) from soil to roots and to shoots in *C. sativus* is generally limited, though the two crystal structures were evident in the leaf trichomes and fruit by μ-XANES spectra (Servin et al., 2013). Ruotolo et al. (2018) analyzed and reviewed the molecular responses of *A. thaliana* and other model species to $nTiO_2$ and reported that exposure triggers an abiotic stress response at the transcriptomic level, involving ROS detoxification systems, triterpenoid and phenylpropanoid metabolism, and hormone signaling pathways involving in the response to salicylic acid, jasmonic acid, ethylene, and brassinosteroids. At the post-transcriptional level, several miRNAs were strongly modulated, including miR395 and miR399 as key regulators of plant adaptive responses to nutrient starvation (Pagano et al., 2021). Thus, the ability of $nTiO_2$ to modulate ROS signaling is particularly effective under abiotic stress conditions. Here, the presence of this ENMs enhances plant physiological parameters by stimulating the activation of several defense mechanisms. Several studies (in plants such as *C. sativus*, *S. lycopersicum*, *V. faba*) have shown that in both saline soils and under drought conditions, the addition of $nTiO_2$ increases root length, plant biomass, and other parameters such as H_2O_2 level, antioxidant activity, sugar content, and chlorophyll amount (Servin et al., 2012; Nasir Kahn, 2016; Abdel Latef et al., 2018; Mustafa et al., 2021). However, higher concentrations can result in phytotoxicity, likely due to aggregation and subsequent excessive ROS production (Mattiello et al., 2015; Gohari et al., 2020). However ROS are “double blade” sword because they can also trigger production of defensive

molecules as shown recently by Castro et al., (2021). Interestingly, when either considering the utilization of pristine and coated $nTiO_2$ (hydrophilic or hydrophobic) in carrot (*Daucus carota* L.), responses observed depended mainly on the $nTiO_2$ surface coating, concentration and in soil weathering (Wang et al., 2021a; 2021b). Taproot and leaf fresh biomass and plant height were all increased with exposure, as well as nutrient uptake (Fe in leaves; Mg in taproots; Ca, Zn, K in roots). Conversely, sugar and starch contents were negatively affected, compromising the nutritional quality (Wang et al., 2021b).

2.3. Gold and silver nanoparticles

Similar to $nTiO_2$, gold nanoparticles (nAu) are highly stable in plants: nAu remained mostly as Au^0 within the plant tissues (*Nicotiana tabacum* L. cv. Xanthi nc.), even if accumulated and translocated (Sabo-Attwood et al., 2011). Specifically, XANES analyses demonstrated that nAu maintained its nanoparticle structure without any biotransformation or ionic release. There are no actual uses for gold nanoparticles and plants, it just used as a tool to study NP-plant interactions. nAu levels in biosolids would ever be high enough to be considered phytotoxic. It is known that nAu toxicity depends on concentration, particle size and shape: nAu with a smaller particle size (3.5nm, concentration of 48 mg L^{-1}) were evenly biodistributed across the plant in comparison with the 18.5nm nAu (in a concentration of 76 mg L^{-1}), even leading to the formation of necrotic leaf lesions and plant death after 30 days (Sabo-Attwood et al., 2011). Other studies have shown that nAu exposure improved radical scavenging and antioxidant enzymatic activities and modulated miRNA expression implicated plant abiotic stress response (miR398, miR408). In particular, the regulation of superoxide dismutase (SOD) led to an increased ROS scavenging activity, root elongation, seedling growth, and seed yield (Arora et al. 2012; Kumar et al., 2013; Siddiqi & Husen, 2017).

Given the widespread commercial utilization and environmental relevance (*e.g.,* wastewater treatment; fertilization) of silver nanoformulations (nAg), the effect on plant species has been a topic of robust study. Stegemeier et al. (2015) analyzed the nAg and nAg_2S speciation in *Medicago sativa*

L., demonstrating that nAg accumulates in the root elongation area but that nAg_2S remains adhered to the root surface; Ag ions accumulate more uniformly throughout the root tissues. Notably, the Ag accumulation in the root apoplast was determined by XRF. The presence of nAg in root cell walls demonstrated the uptake of partially dissolved nAg and translocation along the apoplast. Larue et al. (2014) localized and determined nAg speciation in *L. sativa* after foliar spray treatment through μ-XRF and μ-XAS techniques; the authors reported that nAg was able to cross the foliar cuticle, penetrating in the leaf tissue through the stomata. Moreover, nAg biotransformed through oxidation and complexation with thiol-containing molecules such as glutathione (GSH). These findings correlated well with the transcriptomics analyses of *A. thaliana* exposed to different types of nAg: plant response included defensin-like proteins, plant thionin, β-glucosidases, cytochrome P450 proteins, and glutathione-S-transferase (GST) members (Kaveh et al., 2013). Although some studies point out that the morphological and physiological effects of nAg exposure were strictly dependent on particle size and concentration and that sublethal concentrations may have also beneficial effects (Wang et al., 2013; Syu et al., 2014), most of reports demonstrated reduced root elongation and shoot biomass, together with decreased levels of chlorophyll, pigments, micronutrients, and increased level of ROS and activity of enzymes involved in the oxidative stress response (Yin et al., 2011; Zuverza-Mena et al., 2016; Yang et al., 2018; Lahuta et al., 2022).

2.4. Iron-based ENMs

Iron-based nanomaterials, including iron oxides (nFeOx) and zero valent iron (nZVI), have been investigated in plant systems and the reports highlight two major routes of entry: i) a reductive and proton-promoted process able to modify the structure of the ENM or ii) through the secretion of plant transporters (*e.g.*, phytosiderophores) with a high affinity for Fe (III) (Morrissey & Guerinot, 2009). Dwivedi et al. (2018) investigated nZVI exposure in *C. sativus* and reported that transformed nZVI was stored in the root cell membrane and vacuoles of the leaf parenchyma. XAS identified ferric citrate and iron (oxyhydr)oxides as the main transformation products in roots and shoots, albeit in

different proportions. The major pathways of nZVI biotransformation invovle interaction with low molecular weight organic acid ligands and on the dissolution/precipitation of the mineral products. Transcriptional analyses performed on H+-ATPase genes (*CsHA1*, *CsHA2*) showed an upregulation of these genes upon nZVI exposure (and relative root acidification), indicating that the plant-promoted transformation of nZVI can be driven by protons released by the roots.

A separate study investigated the effects of nFe_2O_3 and nFe_3O_4 on *A. thaliana*, highlighting differences in the response between nanoparticle forms and metal salts through a nanoscale-specific response pathway involving energy production and oxidative stress. The differential response was ascribed to the ENM and the metal salt dissolution rates and the toxicity of the metal ion, which is more compatible with biotransformation processes in the plant tissues. Importantly, specific effects on plastid and mitochondrial genomes were evident, with nFeOx causing a 1- to 3-fold increase in ptDNA and mtDNA copy numbers depending on the stability of the nanoform utilized (Pagano et al., 2022).

Given their widespread application in soil and water remediation, a primary concern with iron nanoparticles is a potential toxicity from excessive accumulation in the environment. However, several studies have shown that plant exposure to this type of nanoparticle does not result in phytotoxicity. For example, Dwivedi et al. (2018) evaluated the potential environmental impact of nZVI on *C. sativus* in soil and in hydroponic culture, and reported no instances of reduced plant biomass even at the highest doses (from 250 to 1000 mg L^{-1}) and for *O. sativa*, the low doses (50-500 mg L^{-1}) of nZVI and nFe_3O_4 improved plant growth (Li et al., 2021). The use of this nanomaterial as a soil conditioner for remediation of metal-contaminated soils is confirmed by the demonstration of improved plant growth in Cd-contaminated soils (Rizwan et al., 2019; Manzoor et al., 2021); mechanistically, this involves limiting cadmium translocation and the promotion of antioxidant activity.

In summary, the extent and the degree of biotransformation of nZVI, which consists in the biochemical alteration of chemical compounds within a living tissue, are reflected in the physico-chemical properties, macromolecular interaction, and biologically mediated pathways observed.

2.5. Zinc-based ENMs

Zinc-based nanomaterials have been applied to plants to increase food safety, promote food production and enhance sustainability by reducing oxidative stress symptoms induced by abiotic stressors (Faizan et al., 2021). nZnO is characterized by a low stability, and a high dissolution rate (Lv et al., 2021). Hernandez-Viezcas et al. (2013) exposed *Glycine max* L. to nZnO (500 mg kg^{-1}, 48d exposure): μ-XRF analysis showed no detectable ZnO NPs within the tissues, while μ-XANES data showed O-bound Zn in a form resembling Zn citrate. Lv et al. (2015) studied the effects of nZnO in *Z. mays* L. and used μ-XANES to demonstrate that the majority of accumulated Zn was derived from Zn^{2+} released from the nanoparticles and was accumulated mainly as Zn phosphate in epidermis, cortex, and root tip cells. The results were correlated to transcriptomic analyses in which gene ontology (GO) performed in nZnO-exposed *A. thaliana* revealed significant commonalities with the response to Zn^{2+} ions, particularly with proteins involved in metal binding, transport, metal homeostasis and detoxification. This suggests that Zn ion release by nZnO is a key in mediating the overall effect on plant species (Landa et al., 2015). These findings have been extended to other species, such as *C. pepo* L.; here nZnO treatment was shown to modulate genes that encode for transporters of heavy metals, cellular response to abiotic stress, decreased chlorophyll production, and induction of secondary metabolite biosynthesis (Pagano et al., 2017).

In recent years other forms of Zn-based nanomaterials have been tested for a potential plant remediation purpose, such as ZnS QDs (Imperiale et al., 2022). An analysis of the effect of ZnS QDs and ionic Zn exposure on mitochondrial and plastid genome copy number demonstrates that both increase by 1 to 3-fold), but that ZnS QDs dissolution alone does not explain the phenomenon; this suggests that ZnS QDs biotransformation may occur within the plant tissues and organs to a form

more similar to ionic than nanoscale Zn (Pagano et al., 2022). Zinc-based nanomaterials have also shown interesting properties as nanofertilizers, including mitigating abiotic and biotic stress (*e.g.*, salt stress, infections), regulating micronutrient uptake, improving water use efficiency, and promoting detoxification of heavy metals (Akhtar et al., 2021; Zafar et al., 2022). Under drought conditions, the nZnO (5 mg kg^{-1}) significantly increased grain yield in sorghum (*Sorghum vulgare* Moench) and fruit yield in eggplant (*Solanum melongena* L.*)*, respectively by 22-183% and 12-23% (Dimkpa et al., 2019; Semida et al., 2021).

2.6. Copper oxide

Copper oxide nanomaterials (nCuO) are among the most utilized ENMs with plants, including use as a nanopesticide or nanofertilizer (Elmer et al., 2018; Lowry et al., 2019; Xu et al., 2022). nCuO dissolution within the plant tissues has been demonstrated (in *C. pepo*), and this was shown to depend not only on uptake, and translocation, but also on the interaction with important biomolecules (Tamez et al., 2019; Marmiroli et al., 2021).

EXAFS (Marmiroli et al., 2021) demonstrated that the local Cu environment in the higher shells shows small differences between roots and flowers. A second Cu-O shell path was present in both flowers and roots; a Cu-Cu bond was also observed in roots but was not observed in flowers. A full transcriptomics analysis by RNAseq was performed to highlight the differential responses between nano-, bulk and ionic forms in roots, leaves and pollen (Marmiroli et al., 2021). The results highlighted the nano-specificity of the responses; the modulated genes (significantly up- or down-regulated genes) observed were more significant in the roots and decreased with translocation to leaves and pollen. However, the portion of the response common to the three Cu forms tested was shown to increase following the translocation from roots to shoots (Marmiroli et al., 2021). A characterization of the main steps and implications involved in this phenomenon, as well as some relevant biomarkers observed in different plant species, is presented in Figure 2 (details reported in Table 1).

Additional data was presented by Servin et al. (2017a), who studied nCuO weathering in *Lactuca sativa* L.: lettuce was exposed to unweathered and 70d-weathered nCuO, and corresponding bulk and ionic form (0–400 mg kg^{-1}) for 70 d in soil. To assess nCuO trophic transfer, leaves were fed to crickets (*Acheta domestica* L.) as primary consumer, followed by insect feeding to lizards (*Anolis carolinensis* L.) as secondary consumer, in both cases for 15d. The authors used μ-XANES to show that Cu(II) was reduced to Cu(I) within the plant roots, and used a transcriptional analysis of to show that several biomarkers, including *CCH* and *COPT5*, which encodes for a copper chaperon and a copper ion transporter, respectively, were significantly decreased by weathering.

In spite of being widely used, results regarding the physiological effects upon nCuO exposure are rather discordant. For example, Deng et al. (2022a) reported that, unlike the bulk counterpart, nCuO (0-600 mg kg^{-1} of soil) does not produce toxicity in rice (*O. sativa*), but rather improves the supply of essential elements, including increasing content of sugar and starch, as well as overall yield.

The grain of weedy and cultivated rice were differentially impacted by nCuO, bulk or ionic forms, showing also a cultivar-specific and concentration-dependent response. Cu translocation directly influenced plant yield, sugar production, starch content, protein content, and expression of auxin associated genes in grain (Deng et al., 2022b). Analyzing the effect of citric acid (CA) coated copper oxide (CA-nCuO) and its application (foliar spray or soil exposure) on the growth and physiology of soybean (*Glycine max* L.), nCuO appeared to be more accessible for plant uptake, as compared to CA-nCuO, decreasing the protein content, and inhibiting plant growth. CA reduced CuO NPs toxicity, demonstrating that surface modification may change the toxic properties of NPs (Deng et al., 2022c).

Treatment of *Lactuca sativa* L. with nCuO significantly increased biomass as compared to CuO microparticles (Wang et al., 2019). In addition, plants can benefit from nCuO treatment through enhanced defensive pathways, and through direct antimicrobial and antifungal activities (Elmer et al., 2018). For example, exposure of nCuO to *Solanum lycopersicum* increased root and stem length, leaf number, and chlorophyll content, and also inhibited the mycelial growth of *Fusarium oxysporum* sp.

Lycopersici (Lopez-Lima et al., 2021). Conversely, some authors report toxic and inhibitory effects on the growth in plants such as lettuce (*Lactuca sativa* L., 0-1000 mg $L^{-1,}$ 5-15d exposure by foliar spray), turnip (*Brassica rapa* L., 50-500 mg L^{-1}, 14d exposure), and wheat (*Triticum aestivum* L., 50 mg kg^{-1} in sand, 1-14d exposure) upon nCuO treatment. The toxic effects are largely ascribed to the redox reactivity and ROS generation of the nanoparticle form (Dimkpa et al., 2012; Chung et al., 2019; Xiong et al., 2020). Others have reported no significant impact at the physiological level (Servin et al., 2017a; Tamez et al., 2019; Marmiroli et al., 2021; Roubeau Dumont et al., 2022), which highlights the importance of the experimental variables and design, including dose, particle properties, exposure conditions and endpoints.

2.7. Quantum dots

Cadmium-based nanomaterials, and cadmium sulfide quantum dots (CdS QDs) in particular, have been used as a model material to elucidate physiological mechanisms and molecular pathways involved in the response plant response to exposure (Marmiroli et al., 2014; Imperiale et al., 2022). A Systems biology approach gave a complete picture of the targets in both model (*A. thaliana*) and crop (*C. pepo*) species (Marmiroli et al., 2014; Marmiroli et al., 2015; Pagano et al., 2017; Gallo et al., 2021; Marmiroli et al., 2020; Pagano et al., 2022). In *A. thaliana*, CdS QDs tolerant mutants were used to establish *in vitro* inhibition concentrations for growth (80 mg L^{-1}) in an attempt to elucidate the mechanisms involved in the plant response; the results largely implicated metabolic functions and chloroplast energy production as sensitive targets (Marmiroli et al., 2014). The results demonstrate that CdS QDs and ionic Cd were exploiting different pathways in the plant, highlighting that the tolerance to CdS QDs did not overlap with the tolerance to $CdSO_4$. Conversely, Cd sensitive mutants of Arabidopsis (Howden & Cobbett, 1992) that were exposed to CdS QDs did not exhibit differences in growth as compared to the wild type line (Marmiroli et al., 2014). A transcriptomic analysis and proteomic comparison between wild type and tolerant mutants highlighted that only a few genes were commonly modulated upon ionic Cd and CdS QDs treatment (Marmiroli et al., 2015, Gallo et al.,

2021). Marmiroli et al., (2020) used EXAFS to investigate the cadmium environment in planta and showed that the spectra were compatible with a mixed O/S coordination; while Cd–S distances did not show relevant variations, Cd–O distances varied in samples grown with QDs compared with those grown with $CdSO_4$. The number of Cd–S bonds in plants grown with QDs was higher than Cd–O bonds. This EXAFS analysis demonstrated that CdS QDs were biotransformed after uptake: the QD original structure was modified but not completely absent within the plant cell, and Cd atoms were not released as Cd ions. Interestingly, CdS QDs showed a relatively high stability; once accumulated by the plant, the QD may go through different stages in the response pathways: i) exposure: explained by the different genetic mechanisms behind the physiological/molecular response between the wild type and tolerant phenotypes; ii) reactivity/biotransformation: explained by a transition phase in which the structure of CdS QDs is modified to decrease particle reactivity, and this can be detected by XANES and EXAFS analyses; iii) effects/detoxification: transcriptomic, proteomic and metabolomic response related to the physico-chemical forms after QDs biotransformation. Additionally, the effects on organelle genomes (ptDNA and mtDNA) demonstrate how QDs biotransformation may modify the genomes stoichiometry or sub-stoichiometry, likely through potential morpho-functional adaptive response triggered by modifications in the bioenergetic redox balance, or a reduction of photosynthesis or cellular respiration rates after QD exposure (Pagano et al., 2022).

Similarly to what was observed in *A. thaliana*, CdS QDs induced analogous effects other plant species of agricultural interest: Pagano et al. (2017) analyzed the effects of the CdS QDs in a context of ENMs binary co-contamination, highlighting a similar response as in *A. thaliana*; specific and common biomarkers were involved between CdS QDs and other the ENMs tested ($nCeO_2$, nLa_2O_3, nCuO, nZnO). Majumdar et al. (2019) investigated the effect of differently functionalized CdS QDs in *G. max*; the authors used proteomic and metabolomic endpoints to demonstrate how the transmembrane proteins involved uptake and related genes including *NRAMP6* and *HMA8* were differently regulated in CdS QDs and ion treated plants. In addition, ATP-dependent ion transporters

in the membranes presented feedback mechanisms in the soybean roots to restrict the uptake of CdS QDs and simultaneously to alter the mineral acquisition. Moreover, CdS QDs altered major metabolic functions, including glutathione metabolism, the tricarboxylic acid cycle, glycolysis, fatty acid oxidation and phenylpropanoid and amino acids biosynthesis. Physiologically, CdS QDs, induced oxidative stress, decreased biomass, reduced chlorophyll and carotenoids content, and damaged primary roots (Majumdar et al., 2019; Pagano et al., 2022).

3. Biotransformation as a perspective to comprehend ENM response in plant

ENMs have been rather extensively tested in recent years, with data indicating that several physico-chemical parameters are fundamental to explaining their behaviour during exposure, including composition, stability, surface charge, and functionalization. These ENM properties become biologically relevant and mediate subsequent biotransformation processes, including: i) the possibility to be translocated within organs, tissues, and cells; ii) the ability to interact with the biologically active environment within the plant (*e.g.*, phospholipids, nucleic acids, proteins, secondary metabolites, reactive oxygen species); iii) the dissolution rate and the consequent ion release. Importantly, to fully comprehend the plant response to ENMs exposure, one must consider the biologically modified ENMs forms that are indicative of the highly complex interactions between plants and ENMs interaction. Integration of the information from physiological and molecular analyses with physical evidence (*e.g.*, types and number of atoms surrounding the ENM, radial distance between atoms of the interactors and atoms constituting the ENM; ENM crystal structure) obtained through high energy X-ray spectroscopy platforms such as synchrotron-based techniques will enable a more realistic, mechanistic, and systems-level picture of plant response to ENM exposure.

This review describes some of the primary biological constraints that determine ENM biotransformation in plants (Figure 2, Table 2). For ENMs characterized by high stability, such as

$nCeO_2$, $nTiO_2$ or nAu, limited dissolution and translocation has been observed, even considering differences determined by structure and atomic properties related to the redox state (*e.g.*, the redox state of Ce). Conversely, ENMs with higher dissolution such as Fe- or Zn-based ENMs, nCuO, nAg or nLa_2O_3, exhibit greater translocation rates, likely involving a dynamic process of particle interaction with the plant biomolecules that increase ENM solubility and bioavailability, as exemplified with nCuO (Marmiroli et al., 2021).

The importance of in planta ENM biotransformation is corroborated indirectly at molecular level by "omic" analyses that can describe the effects on the plant at genetic and epigenetic level (including genome stability) by measuring transcriptional modulation, protein abundance and metabolite synthesis, as well as on physiological (phenotypical) level by observing the plant redox state, ROS production, photosynthetic activity, and cellular respiration rate in response to stress (Marmiroli et al., 2020; Gallo et al., 2021). The direct measurement of changes upon ENM biotransformation within the plant tissues by synchrotron-based techniques (μ-XRF, μ-XANES, and XAS) provide critical information in terms of distribution, atomic redox state, and atomic local structure, and add critical knowledge necessary to understand the ENM-plant interactions. This information is highly relevant with regard to potential applicability: ENMs can interact with sensitive ecosystem components within trophic food chains, affect microbial populations in soil, enter into the plant and where they can be translocated to different tissues and organs, including the edible tissues or organs (Holden et al., 2013; Liu et al., 2015). Biotransformation can occur at each step within these processes, modifying and/or amplifying ENM effects at organism level. These interactions from the level of ecosystem, organism, tissue, cell, and organelles become key factors when applying "ENM biotransformation" as a concept for a safer design, when considering applications for agriculture and food production, and for minimizing the adverse biological impact (Burello & Worth, 2015; Pagano et al., 2018; Lowry et al., 2019; Kah et al., 2019; Zulfiqar et al., 2019; Ma et al., 2020; Hameed et al., 2022; Xu et al., 2022).

Author contributions

Conceptualization: LP, MM; original draft preparation: LP, MM, RR; review and editing: JCW, NM. All authors revised and agreed on the final version of the manuscript.

Acknowledgements

This work was supported by European Union's HORIZON 2020 research and innovation Programme [grant number 818431 SIMBA], European Union's PRIMA Programme [grant number 1811 SUSTAINOLIVE], and FIL (Fondi Locali per la Ricerca). The funding sources had no involvement in study design, collection, analysis and interpretation of data, writing, decision to submit the paper.

Declaration of competing interest

The authors declare no competing financial interests.

References

Abutalib M.M., Rajeh A. 2020. Enhanced structural, electrical, mechanical properties and antibacterial activity of Cs/PEO doped mixed nanoparticles (Ag/TiO_2) for food packaging applications. Polymer Testing. 107013.

Abdel Latef A.A.H., Srivastava A.K., El-sadek M.S.A., Kordrostami M., Tran L.-S.P. 2018. Titanium dioxide nanoparticles improve growth and enhance tolerance of broad bean plants under saline soil conditions. Land Degrad. Dev. 29, 1065–1073.

Akhtar N., Ilyas N., Meraj T.A., Pour-Aboughadareh A., Sayyed R.Z., Mashwani Z.U.R., Poczai P. 2022. Improvement of Plant Responses by Nanobiofertilizer: A Step towards Sustainable Agriculture. Nanomaterials. 12, 965.

An J., Hu P., Li F., Wu H., Shen Y., White J.C., Tian X., Li Z., Giraldo J.P. 2020. Molecular mechanisms of plant salinity stress tolerance improvement by seed priming with cerium oxide nanoparticles. Environ. Sci: Nano. 7, 2214.

Arora S., Sharma P., Kumar S., Nayan R., Khanna P.K., Zaidi M.G.H. 2012. Gold-nanoparticle induced enhancement in growth and seed yield of *Brassica juncea*. Plant Growth Regul. 66, 303–310.

Burello E., Worth A.P. 2015. A rule for designing safer nanomaterials: do not interfere with the cellular redox equilibrium. Nanotoxicology. 9, 116-117.

Castillo-Michel H.A., Larue C., Pradas del Real A.E., Cotte M., Sarret G. 2017. Practical review on the use of synchrotron based micro- and nano- X-ray fluorescence mapping and X-ray absorption spectroscopy to investigate the interactions between plants and engineered nanomaterials. Plant Physiol Biochem. 110, 13-32.

Castro B., Citterico M., Kimura S., Stevens D.M., Wrzaczek M., Coaker G. 2021. Stress-induced reactive oxygen species compartmentalization, perception and signalling. Nat. Plants 7, 403–412.

Chebakova K.A., Dzidziguri E.L., Sidorova E.N., Vasiliev A.A., Ozherelkov D.Y., Pelevin I.A., Gromov A.A., Nalivaiko A.Y. 2021. X-ray Fluorescence Spectroscopy Features of Micro- and Nanoscale Copper and Nickel Particle Compositions. Nanomaterials. 14, 11(9), 2388.

Chen L., Peng Y., Zhu L., Huang Y., Bie Z., Wu H. 2022. CeO_2 nanoparticles improved cucumber salt tolerance is associated with its induced early stimulation on antioxidant system. Chemosphere. 299, 134474.

Chang C., Bowman J.L., Meyerowitz E.M. 2016. Field Guide to Plant Model Systems. Cell. 167, 325-339.

Chung I.M., Rekha K., Venkidasamy B., Thiruvengadam M. 2019. Effect of Copper Oxide Nanoparticles on the Physiology, Bioactive Molecules, and Transcriptional Changes in *Brassica rapa* ssp. rapa Seedlings. Water. Air. Soil Pollut. 230, 48.

d'Acapito F., Lepore G.O., Puri A., Laloni A., La Manna F., Dettona E., De Luisa A., Martin A. 2019. The LISA beamline at ESRF. J. Synchrotron Rad. 26, 551-558.

Deng C., Wang Y., Cota-Ruiz K., Reyes A., Sun Y., Peralta-Videa J.R., Hernandez-Viezcas J.A., Turley R.S., Niu G., Li C., Gardea-Torresdey J.L. 2020. Bok choy (*Brassica rapa*) grown in copper oxide nanoparticles-amended soils exhibits toxicity in a phenotype-dependent manner: Translocation, biodistribution and nutritional disturbance. J Haz Mater, 398, 122978.

Deng C., Wang Y., Navarro G., Sun Y., Cota-Ruiz K., Hernandez-Viezcas J.A., Niu G., Li C., White J.C., Gardea-Torresdey J. 2022a. Copper oxide (CuO) nanoparticles affect yield, nutritional quality, and auxin associated gene expression in weedy and cultivated rice (*Oryza sativa* L.) grains. Sci. Total Environ. 810, 152260.

Deng C., Wang Y., Navarro G., Sun Y., Cota-Ruiz K., Hernandez-Viezcas J.A., Niu G., Li C., White J.C., Gardea-Torresdey J. 2022b. Copper oxide (CuO) nanoparticles affect yield, nutritional quality, and auxin associated gene expression in weedy and cultivated rice (Oryza sativa L.) grains, Scie Tot Environ, 810, 152260.

Deng C., Wang Y., Cantu J.M., Valdes C., Navarro G., Cota-Ruiz K., Hernandez-Viezcas J.A., Li C., Elmer W.H., Dimkpa C.O., White J.C., Gardea-Torresdey, J.L. 2022c. Soil and foliar exposure of soybean (*Glycine max*) to Cu: Nanoparticle coating-dependent plant responses, NanoImpact, 26,100406.

Dimkpa C.O., McLean J.E., Latta D.E., Manangón E., Britt D.W., Johnson W.P., Boyanov M.I., Anderson A.J. 2012. CuO and ZnO nanoparticles: Phytotoxicity, metal speciation, and induction of oxidative stress in sand-grown wheat. J. Nanoparticle Res. 14, 1125.

Dimkpa C.O., Singh U., Bindraban P.S., Elmer W.H., Gardea-Torresdey J.L., White J.C. 2019. Zinc oxide nanoparticles alleviate drought-induced alterations in sorghum performance, nutrient acquisition, and grain fortification. Sci. Total Environ. 688, 926–934.

Dwivedi A.D., Yoon H., Singh J.P., Chae K.H., Rho S-C., Hwang D.S., Chang Y-S. 2018. Uptake, Distribution, and Transformation of Zerovalent Iron Nanoparticles in the Edible Plant *Cucumis sativus*. Environ Sci Technol. 52 (17), 10057-10066.

EFSA. 2021. Safety assessment of titanium dioxide (E171) as a food additive. EFSA Journal. 19(5), 6585.

Elmer W., De la Torre-Roche R., Pagano L., Majumdar S., Zuverza-Mena N., Dimkpa C., Gardea-Torresdey, J.L., White J.C. 2018. Effect of Metalloid and Metal Oxide Nanoparticles on Fusarium Wilt of Watermelon. Plant Dis. 102, 1394−1401.

Eriksson P., Tal A.A., Skallberg A., Brommesson C., Hu Z., Boyd R.D., Olovsson W., Fairley N., Abrikosov I.A., Zhang X., Uvdal K. 2018. Cerium Oxide Nanoparticles with Antioxidant Capabilities And Gadolinium Integration For MRI Contrast Enhancement. Sci. Rep. 8, 6999.

Faizan M., Yu F., Chen C., Faraz A., Hayat S. Zinc Oxide Nanoparticles Help to Enhance Plant Growth and Alleviate Abiotic Stress: A Review. Curr Protein Pept Sci. 2021, 22(5), 362-375.

Gallo V., Zappettini A., Villani M., Marmiroli N., Marmiroli M. 2021. Comparative Analysis of Proteins Regulated During Cadmium Sulfide Quantum Dots Response in *Arabidopsis thaliana* Wild Type and Tolerant Mutants. Nanomaterials. 11, 615.

Gardea-Torresdey J.L., Rico C.M., White J.C. 2014. Trophic transfer, transformation, and impact of engineered nanomaterials in terrestrial environments. Environ. Sci. Technol. 48, 2526−2540.

Giese B., Klaessig F., Park B., Kaegi R., Steinfeldt M., Wigger H., von Gleich A., Gottschalk F. 2018. Risks, Release and Concentrations of Engineered Nanomaterial in the Environment. Sci Rep 8, 1565.

Gohari G., Mohammadi A., Ak A., Panahirad S. 2020. Titanium dioxide nanoparticles (TiO_2 NPs) promote growth and ameliorate salinity stress effects on essential oil profile and biochemical attributes of *Dracocephalum moldavica*. Sci. Rep. 10, 912.

Goldstein J.I., Newbury D.E., Echlin P., Joy D.C., Lyman C.E., Lifshin E., Sawyer L., Michael J.R. Editors. Scanning Electron Microscopy and X-Ray Microanalysis, Third Edition. 2003 Springer Science+Business Media LLC, 233 Spring Street, New York, NY 10013 USA.

Gottschalk F., Sonderer T., Scholz R.W., Nowack B. 2009. Modeled Environmental Concentrations of Engineered Nanomaterials (TiO2, ZnO, Ag, CNT, Fullerenes) for Different Regions. Environ. Sci. Technol. 43, 24, 9216–9222.

Gräfe M., Donner E., Collins R.N., Lombi E. 2014. Speciation of metal(loid)s in environmental samples by X-ray absorption spectroscopy: A critical review. Analytica Chimica Acta. 822, 1-22.

Gui X., Rui M., Song Y., Yuhui M., Rui Y., Zhang P., He X., Li Y., Zhang Z., Liu L. 2017. Phytotoxicity of CeO_2 nanoparticles on radish plant *(Raphanus sativus*). Environ. Sci. Pollut. Res. 24, 13775–13781.

Gurman S.J. 1995. Interpretation of EXAFS Data. J. Syncr. Rad. 2, (1), 56-63.

Hameed S., Baimanov D., Li X., Liua K., Wang L. 2022. Synchrotron radiation-based analysis of interactions at the nano–bio interface. Environ. Sci.: Nano. Doi: 10.1039/D2EN00408A.

Hassanpouraghdam M.B., Mehrabani L.V., Bonabian Z., Aazami M.A., Rasouli F., Feldo M., Strzemski M., Dresler S. 2022. Foliar Application of Cerium Oxide-Salicylic Acid Nanoparticles (CeO2:SA Nanoparticles) Influences the Growth and Physiological Responses of *Portulaca oleracea* L. under Salinity. Int. J. Mol. Sci. 23, 1–19.

Hernandez-Viezcas J.A., Castillo-Michel H., Andrews J.C., Cotte M., Rico C., Peralta-Videa J.R., Ge Y., Priester J.H., Holden P.A., Gardea-Torresdey J.L. 2013. In situ synchrotron X-ray fluorescence mapping and speciation of CeO_2 and ZnO nanoparticles in soil cultivated soybean (*Glycine max*). ACS Nano. 26, 7(2),1415-1423.

Holden P.A., Nisbet R.M., Lenihan H.S., Miller R.J., Cherr G.N., Schimel J.P., Gardea-Torresdey J.L. 2013. Ecological Nanotoxicology: Integrating Nanomaterial Hazard Considerations Across the Subcellular, Population, Community, and Ecosystems Levels. Acc. Chem. Res. 46, 813−822.

Hong J., Wang C., Wagner D.C., Gardea-Torresdey J.L., He F., Rico C.M. 2021. Foliar application of nanoparticles: mechanisms of absorption, transfer, and multiple impacts. Environ. Sci.: Nano, 8, 1196-1210.

Howden R., Cobbett C.S. 1992. Cadmium-sensitive mutants of Arabidopsis thaliana. Plant Physiol. 99, 100−107.

Huang Y., Li W., Minakova A.S., Anumol T., Keller A.A. 2018. Quantitative analysis of changes in amino acids levels for cucumber (*Cucumis sativus*) exposed to nano copper. NanoImpact. 12, 9−17.

Huangfu X., Xu Y., Liu C., He Q., Ma J., Ma C., Huang R. 2019. A review on the interactions between engineered nanoparticles with extracellular and intracellular polymeric substances from wastewater treatment aggregates. Chemosphere. 219, 766-783.

Imperiale D., Lencioni G., Marmiroli M., Zappettini A., White J.C., Marmiroli N. 2022. Interaction of hyperaccumulating plants with Zn and Cd nanoparticles. Sci Tot Environ. 817, 152741.

Judy J.D., Unrine J.M., Rao W., Wirick S., Bertsch P.M. 2012. Bioavailability of gold nanomaterials to plants: importance of particle size and surface coating. Environ Sci Technol. 7, 8467-8474.

Kah M., Kookana R.S., Gogos A., Bucheli T.D. 2018. A critical evaluation of nanopesticides and nanofertilizers against their conventional analogues. Nat. Nanotechnol. 13, 677–684.

Kah M., Tufenkji N., White J.C. 2019. Nano-enabled strategies to enhance crop nutrition and protection. Nat. Nanotechnol. 14, 532−540.

Karny A., Zinger A., Kajal A., Shainsky-Roitman J., Schroeder A. 2018. Therapeutic nanoparticles penetrate leaves and deliver nutrients to agricultural crops. Sci Rep. 8(1), 7589.

Kaveh R., Li Y.S., Ranjbar S., Tehrani R., Brueck C.L., Van Aken B. 2013. Changes in *Arabidopsis thaliana* gene expression in response to silver nanoparticles and silver ions. Environ. Sci. Technol. 47 (18), 10637−10644.

Keller A.A., McFerran S., Lazareva A., Suh S. 2013. Global life cycle releases of engineered nanomaterials. J. Nanopart. Res. 15, 1692−1709.

Keller A.A., Lazareva A. Predicted Releases of Engineered Nanomaterials: From Global to Regional to Local. Environ. Sci. Technol. Lett. 2014, 1, 1, 65–70.

Kumar V., Guleria P., Kumar V., Yadav S.K. 2013. Gold nanoparticle exposure induces growth and yield enhancement in *Arabidopsis thaliana*. Sci. Total Environ. 461–462, 462–468.

Kumari P., Alam M., Siddiqi W.A. 2019. Usage of nanoparticles as adsorbents for wastewater treatment: An emerging trend. Sustain. Mater. Technol. 22, e00128.

Lahuta L.B., Szablińska-Piernik J., Głowacka K., Stałanowska K., Railean-Plugaru V., Horbowicz M., Pomastowski P., Buszewski B. 2022. The Effect of Bio-Synthesized Silver Nanoparticles on

Germination, Early Seedling Development, and Metabolome of Wheat (*Triticum aestivum* L.). Molecules. 27, 2303.

Landa P., Prerostova S., Petrova S., Knirsch V., Vankova R., Vanek T. 2015. The Transcriptomic Response of *Arabidopsis thaliana* to Zinc Oxide: A Comparison of the Impact of Nanoparticle, Bulk, and Ionic Zinc. Environ. Sci. Technol. 49 (24), 14537−14545.

Larue C., Castillo-Michel H., Sobanska S., Cécillon L., Bureau S., Barthès V., Ouerdane L., Carrière M., Sarret G. 2014. Foliar exposure of the crop *Lactuca sativa* to silver nanoparticles: Evidence for internalization and changes in Ag speciation. J Haz Mat. 264, 98-106.

Li M., Zhang P., Adeel M., Guo Z., Chetwynd A.J., Ma C., Bai T., Hao Y., Rui Y. 2021. Physiological impacts of zero valent iron, Fe_3O_4 and Fe_2O_3 nanoparticles in rice plants and their potential as Fe fertilizers. Environ. Pollut. 269, 116134.

Liu W., Tian S., Zhao X., Xie W., Gong Y., Zhao D. 2015. Application of Stabilized Nanoparticles for In Situ Remediation of Metal-Contaminated Soil and Groundwater: a Critical Review. Curr. Pollut. Reports. 1, 280–291.

Liu Y., Persson D.P., Li J., Liang Y., Li T. 2021. Exposure of cerium oxide nanoparticles to the hyperaccumulator *Sedum alfredii* decreases the uptake of cadmium via the apoplastic pathway. J. Hazard. Mater. 417, 125955.

Lizzi D., Mattiello A., Piani B., Fellet G., Adamiano A., Marchiol L. 2020. Germination and early development of three spontaneous plant species exposed to nanoceria ($nCeO_2$) with different concentrations and particle sizes. Nanomaterials. 10, 1–16.

Lopez-Lima D., Mtz-Enriquez A.I., Carrión G., Basurto-Cereceda S., Pariona N. 2021. The bifunctional role of copper nanoparticles in tomato: Effective treatment for Fusarium wilt and plant growth promoter. Sci. Hortic. 2, 277.

López-Moreno M.L., de la Rosa G., Hernández-Viezcas J.A., Castillo-Michel H., Botez C.E., Peralta-Videa J.R., Gardea-Torresdey J.L. 2010. Evidence of the Differential Biotransformation and Genotoxicity of ZnO and CeO2 Nanoparticles on Soybean (*Glycine max*) Plants. Environ. Sci. Technol. 44, 19, 7315–7320.

Lowry G.V., Avellan A., Gilbertson L.M. 2019. Opportunities and challenges for nanotechnology in the agri-tech revolution. Nat. Nanotechnol. 14, 517−522.

Lv J., Zhang S., Luo L., Zhang J., Yang K., Christie P. 2015. Accumulation, speciation and uptake pathway of ZnO nanoparticles in maize. Environ. Sci.: Nano. 2, 68.

Lv J., Christie P., Zhang S. 2019. Uptake, translocation, and transformation of metal-based nanoparticles in plants: recent advances and methodological challenges. Environ. Sci.: Nano. 6, 41-59.

Lv Z., Sun H., Du W., Li R., Mao H., Kopittke P.M. 2021. Interaction of different-sized ZnO nanoparticles with maize (*Zea mays*): Accumulation, biotransformation and phytotoxicity. Sci Tot Environ. 796, 148927.

Ma C., White J.C., Zhao J., Zhao Q., Xing B. 2018. Uptake of Engineered Nanoparticles by Food Crops: Characterization, Mechanisms, and Implications. Annu. Rev. Food Sci. Technol. 9, 129–153.

Ma C., Borgatta J., Hudson B.G., Tamijani A.A., De La Torre-Roche R., Zuverza-Mena N., Shen Y., Elmer W., Xing B., Mason S. E., Hamers R. J., White J.C. 2020. Advanced material modulation of nutritional and phytohormone status alleviates damage from soybean sudden death syndrome. Nat. Nanotechnol. 15, 1033−1042.

Ma Y., Zhang P., Zhang Z., He H., Li Y., Zhang J., Zheng L., Chu S., Yang K., Zhao Y., Chai Z. 2015. Origin of the different phytotoxicity and biotransformation of cerium and lanthanum oxide nanoparticles in cucumber, Nanotoxicology. 9(2), 262–270.

Majumdar S., Almeida I.C., Arigi E.A., Choi H., VerBerkmoes N.C., Trujillo-Reyes J., Flores-Margez J.P., White J.C., Peralta-Videa J.R., Gardea-Torresdey J.L. 2015. Environmental Effects of Nanoceria on Seed Production of Common Bean (*Phaseolus vulgaris*): A Proteomic Analysis. Environ. Sci. Technol. 49, 22, 13283–13293.

Majumdar S., Pagano L., Wohlschlegel J.A., Villani M., Zappettini A., White J.C., Keller A.A. 2019. Proteomic, Gene And Metabolite Characterization Reveal The Uptake And Toxicity Mechanisms Of Cadmium Sulfide Quantum Dots In Soybean Plants. Environ. Sci.: Nano. 6, 3010−3026.

Manzoor N., Ahmed T., Noman M., Shahid M., Mudassir M., Ali L., Alnusaire T.S., Li B., Schulin R., Wang G. 2021. Science of the Total Environment Iron oxide nanoparticles ameliorated the cadmium and salinity stresses in wheat plants, facilitating photosynthetic pigments and restricting cadmium uptake. Sci. Total Environ. 769, 145221.

Marmiroli M., Pagano L., Savo Sardaro M.L., Villani M., Marmiroli N. 2014. Genome-wide approach in *Arabidopsis thaliana* to assess the toxicity of cadmium sulfide quantum dots. Environ. Sci. Technol. Environ. Sci. Technol. 48, 5902−5909.

Marmiroli M., Imperiale D., Pagano L., Villani M., Zappettini A., Marmiroli N. 2015. The Proteomic Response of *Arabidopsis thaliana* to Quantum Dots, and Its Correlation with the Transcriptomic Response. Front. Plant Sci. 6, 1104.

Marmiroli M., Lepore G.O., Pagano L., d'Acapito F., Gianoncelli A., Villani M., Lazzarini L., White J.C., Marmiroli N. 2020. The fate of CdS Quantum Dots in plants as revealed by Extended X-ray Absorption Fine Structure (EXAFS) analysis. Environ. Sci. Nano 7, 1150–1162.

Marmiroli M., Pagano L., Rossi R., De La Torre-Roche R., Lepore G.O., Ruotolo R., Gariani G., Bonanni V., Pollastri S., Puri A., Gianoncelli A., Aquilanti G., d'Acapito F., White J.C., Marmiroli N. 2021. Copper Oxide nanomaterial fate in plant tissue: Nanoscale impacts on reproductive tissues. Environ Sci Technol. 55, 15, 10769–10783.

Mattiello A., Filippi A., Poscic F., Musetti R., Salvatici M.C., Giordano C., Vischi M., Bertolini A., Marchiol L. 2015. Evidence of Phytotoxicity and Genotoxicity in *Hordeum vulgare* L. Exposed to CeO_2 and TiO_2 Nanoparticles. Front. Plant Sci. 6, 1043.

Milosevic A., Romeo D., Wick P. 2020. Understanding Nanomaterial Biotransformation: An Unmet Challenge to Achieving Predictive Nanotoxicology. Small. 1907650.

Mitrano D.M., Motellier S., Clavaguera S., Nowack B. 2015. Review of nanomaterial aging and transformations through the life cycle of nano-enhanced products, Environment International, 77, 132-147.

Morrissey J., Guerinot M.L. 2009. Iron uptake and transport in plants: the good, the bad, and the ionome. Chem. Rev. 109 (10), 4553−67.

Mustafa H., Ilyas N., Akhtar N., Iqbal N., Zainab T. 2021. Biosynthesis and characterization of titanium dioxide nanoparticles and its effects along with calcium phosphate on physicochemical attributes of wheat under drought stress. Ecotoxicol. Environ. Saf. 223, 112519.

Nasir Khan M. 2016. Nano-titanium Dioxide (Nano-TiO_2) Mitigates NaCl Stress by Enhancing Antioxidative Enzymes and Accumulation of Compatible Solutes in Tomato (*Lycopersicon esculentum* Mill.). J. Plant Sciences. 11, 1-11.

Neves V.M., Heidrich G.M., Rodrigues E.S., Enders M.S.P., Muller E.I., Nicoloso F.T., Carvalho H.W.P. De, Dressler V.L. 2019. La_2O_3 Nanoparticles: Study of Uptake and Distribution in *Pfaffia glomerata* (Spreng.) Pedersen by LA-ICP-MS and μ - XRF. Environ. Sci. Technol. 53, 10827−10834.

Oh E., Liu R., Nel A, Boeneman Gemill K., Bilal M., Cohen Y., Medintz I.L. 2016. Meta-analysis of cellular toxicity for cadmium-containing quantum dots. Nature Nanotech. 11, 479–486.

Pagano L., Servin A.D., De La Torre-Roche R., Mukherjee A., Majumdar S., Hawthorne J., Marmiroli M., Maestri E., Marra R.E., Isch S.M., Dhankher O.P., White J. C., Marmiroli N. 2016. Molecular Response of Crop Plants to Engineered Nanomaterials. Environ. Sci. Technol. 50 (13), 7198−7207.

Pagano L., Pasquali F., Majumdar S., De La Torre-Roche R., Zuverza-Mena N., Villani M., Zappettini A., Marra R.E., Isch S.M., Marmiroli M., Maestri E., Dhankher O.P., White J.C., Marmiroli N. 2017. Exposure of *Cucurbita pepo* to binary combinations of engineered nanomaterials: Physiological and molecular response. Environ. Sci.: Nano. 4, 1579–1590.

Pagano L., Maestri E., White J.C., Marmiroli N., Marmiroli M. 2018. Quantum dots exposure in plants: Minimizing the adverse response. COESH. 6, 71–76.

Pagano L., Rossi R., Paesano L., Marmiroli N., Marmiroli M. 2021. miRNA regulation and stress adaptation in plants. Env. Exp. Bot. 104369.

Pagano L., Marmiroli M., Villani M., Magnani J., Rossi R., Zappettini A., White J.C., Marmiroli N. 2022. Engineered nanomaterial exposure affects organelle genetic material replication in *Arabidopsis thaliana.* ACS Nano. 16, 2249–2260.

Prado de Moraes A.C., Ribeiro L. da S., de Camargo E.R., Lacava P.T. 2021. The potential of nanomaterials associated with plant growth-promoting bacteria in agriculture. 3 Biotech. 11, 1–17.

Proux O., Lahera E., Del Net W., Kieffer I., Rovezzi M., Testemale D., Irar M., Thomas S., Aguilar-Tapia A., Bazarkina E.F., Prat A., Tella M., Auffan M., Rose J., Hazemann J.L. 2017. High-Energy Resolution Fluorescence Detected X-Ray Absorption Spectroscopy: A Powerful New Structural Tool in Environmental Biogeochemistry Sciences. J Environ Qual. 46, 1146-1157.

Puri A., Lepore G.O., d'Acapito F. 2019. The New Beamline LISA at ESRF: Performances and Perspectives for Earth and Environmental Sciences. Condensed Matter. 4, 12.

Rawat S., Pullagurala V.L.R., Adisa I.O., Wang Y., Peralta-Videa J.R., Gardea-Torresdey J.L. 2018. Factors affecting fate and transport of engineered nanomaterials in terrestrial environments, COESH, 6, 47-53.

Rincon A.M. 2019. Chapter 6 - Presence of nanomaterials on consumer products: food, cosmetics, and drugs. pp. 165-181. Marmiroli N., White J.C., Song J., Eds: In Micro and Nano Technologies, Exposure to Engineered Nanomaterials in the Environment, Elsevier, Amsterdam, The Netherlands.

Rizwan M., Ali S., Ali B., Adrees M., Arshad M., Hussain A., Zia ur Rehman M., Waris A.A. 2019. Zinc and iron oxide nanoparticles improved the plant growth and reduced the oxidative stress and cadmium concentration in wheat. Chemosphere. 214, 269–277.

Rodrigues E.S., Montanha G.S., de Almeida E., Fantucci H., Santos R.M., de Carvalho H.W.P. 2021. Effect of nano cerium oxide on soybean (*Glycine max* L. Merrill) crop exposed to environmentally relevant concentrations. Chemosphere. 273, 128492.

Rossi L., Zhang W., Schwab A.P., Ma X. 2017. Uptake, Accumulation, and in Planta Distribution of Coexisting Cerium Oxide Nanoparticles and Cadmium in *Glycine max* (L.) Merr. Environ. Sci. Technol. 51, 12815−12824.

Roubeau Dumont E., Elger A., Azéma C., Castillo H., Surble S., Larue C. 2022. Cutting-edge spectroscopy techniques highlight toxicity mechanisms of copper oxide nanoparticles in the aquatic plant *Myriophyllum spicatum*. Sci. Total Environ. 803, 150001.

Rui Y., Zhang P., Zhang T., Ma Y., He X., Gui X., Li Y., Zhang J., Zheng L., Chu S., Guo Z., Chai Z., Zhao Y., Zhang Z. 2015. Transformation of ceria nanoparticles in cucumber plants is influenced by phosphate, Environmental Pollution. 198, 8-14.

Ruotolo R., Maestri E., Pagano L., Marmiroli M., White J.C., Marmiroli N. 2018. Plant response to metal-containing engineered nanomaterials: an omics-based perspective. Environ Sci Technol. 52, 5, 2451-2467.

Sabo-Attwood T., Unrine J.M., Stone J.W., Murphy C.J., Ghoshroy S., Blom D., Bertsch P.M., Newman L.A. 2011. Uptake, distribution and toxicity of gold nanoparticles in tobacco (*Nicotiana xanthi*) seedlings. Nanotoxicology. 6(4), 353-360.

Sarret G., Pilon Smits E.A.H., Castillo Michel H., Isaure M.P., Zhao F.J., Tappero R. 2013. Chapter One - Use of Synchrotron-Based Techniques to Elucidate Metal Uptake and Metabolism in Plants, Adv. Agron. 119, 1–82.

Schwab F., Zhai G., Kern M., Turner A., Schnoor J.L., Wiesner M.R. 2016. Barriers, pathways and processes for uptake, translocation and accumulation of nanomaterials in plants – Critical review. Nanotoxicology. 10, 257−278.

Semida W.M., Abdelkhalik A., Mohamed G.F., Abd El-Mageed T.A., Abd El-Mageed S.A., Rady M.M., Ali E.F. 2021. Foliar application of zinc oxide nanoparticles promotes drought stress tolerance in eggplant (*Solanum melongena* L.). Plants. 10, 1–18.

Servin A.D., Castillo-Michel H., Hernandez-Viezcas J.A., Corral Diaz B., Peralta-Videa J.R., Gardea-Torresdey J.L. 2012. Synchrotron Micro-XRF and Micro-XANES Confirmation of the

Uptake and Translocation of TiO2 Nanoparticles in Cucumber (*Cucumis sativus*) Plants. Environ. Sci. Technol. 46, 14, 7637–7643.

Servin A.D., Morales M.I., Castillo-Michel H., Hernandez-Viezcas J.A., Munoz B., Zhao L., Nunez J.E., Peralta-Videa J.R., Gardea-Torresdey J.L. 2013. Synchrotron Verification of TiO2 Accumulation in Cucumber Fruit: A Possible Pathway of TiO2 Nanoparticle Transfer from Soil into the Food Chain. Environ. Sci. Technol. 47, 20, 11592–11598.

Servin A.D., Pagano L., Castillo-Michel H., De la Torre-Roche R., Hawthorne J., Hernandez-Viezcas J.A., Loredo-Portales R., Majumdar S., Gardea-Torresday J.L., Dhankher O.P., White J.C. 2017a. Weathering in soil increases nanoparticle CuO bioaccumulation within a terrestrial food chain. Nanotoxicology. 11, 98−111.

Servin A.D., De la Torre-Roche R., Castillo-Michel H., Pagano L., Hawthorne J., Musante C., Pignatello J., Uchimiya M., White J.C. 2017b. Exposure of agricultural crops to nanoparticle CeO2 in biochar-amended soil. Plant Physiology and Biochemistry. 110, 147-157.

Siddiqi K.S., Husen A. 2017. Engineered Gold Nanoparticles and Plant Adaptation Potential. Nanoscale Res Lett. 11, 400-409.

Song U., Jun H., Waldman B., Roh J., Kim Y., Yi J., Lee E.J. 2013. Functional analyses of nanoparticle toxicity: a comparative study of the effects of TiO2 and Ag on tomatoes (*Lycopersicon esculentum*). Ecotoxicol. Environ. Saf., 93, 60-67.

Stegemeier J.P., Schwab F., Colman B.P., Webb S.M., Newville M., Lanzirotti A., Winkler C., Wiesner M.R., Lowry G.V. 2015. Speciation Matters: Bioavailability of Silver and Silver Sulfide Nanoparticles to Alfalfa (*Medicago sativa*). Environ Sci Technol. 49 (14), 8451-8460.

Syu Y., Hung J.H., Chen J.C., Chuang H. 2014. Impacts of size and shape of silver nanoparticles on Arabidopsis plant growth and gene expression. Plant Physiol. Biochem. 83, 57-64.

Tamez C., Hernandez-Molina M., Hernandez-Viezcas J.A., Gardea-Torresdey J.L. 2019. Uptake, transport, and effects of nano-copper exposure in zucchini (*Cucurbita pepo*). Sci. Total Environ. 665, 100-106.

Verma K.K., Song X.-P., Joshi A., Tian D.-D., Rajput V.D., Singh M., Arora J., Minkina T., Li Y.-R. 2022. Recent Trends in Nano-Fertilizers for Sustainable Agriculture under Climate Change for Global Food Security. Nanomaterials. 12, 173.

Wang J., Koo Y., Alexander A., Yang Y., Westerhof S., Zhang Q., Schnoor J.L., Colvin V.L., Braam J., Alvarez P.J.J. 2013. Phytostimulation of poplars and Arabidopsis exposed to silver nanoparticles and Ag+ at sublethal concentrations. Environ. Sci. Technol. 47, 5442–5449.

Wang Y., Lin Y., Xu Y., Yin Y., Guo H., Du W. 2019. Divergence in response of lettuce (var. ramosa Hort.) to copper oxide nanoparticles/microparticles as potential agricultural fertilizer. Environ. Pollut. Bioavailab. 31, 80–84.

Wang Y., Deng C., Cota-Ruiz K., Tan W., Reyes A., Peralta-Videa J.R., Hernandez-Viezcas J.A., Li C., Gardea-Torresdey J.L. 2021a. Effects of different surface-coated nTiO2 on full-grown carrot plants: Impacts on root splitting, essential elements, and Ti uptake. J Haz Mater, 402, 123768.

Wang Y., Deng C., Cota-Ruiz K., Peralta-Videa J.R., Hernandez-Viezcas J.A., Gardea-Torresdey J.L. 2021b. Soil-aged nano titanium dioxide effects on full-grown carrot: Dose and surface-coating dependent improvements on growth and nutrient quality. Scie Tot Environ, 774, 145699.

Wang Y., Deng C., Elmer W.H., Dimkpa C.O., Sharma S., Navarro G., Wang Z., LaReau J., Steven B.T., Wang Z., Zhao L., Li C., Parkash Dhankher O., Gardea-Torresdey J.L., Xing B., White J.C. 2022. Therapeutic Delivery of Nanoscale Sulfur to Suppress Disease in Tomatoes: In Vitro Imaging and Orthogonal Mechanistic Investigation. ACS Nano, 16, 7, 11204–11217.

White J.C., Zuverza-Mena N., Elmer W.H. 2022. From nanotoxicology to nano-enabled agriculture: Following the science at the Connecticut Agricultural Experiment Station (CAES). Plant Nano Biology, 1, 100007. Doi: 10.1016/j.plana.2022.100007.

Willett W., Rockström J., Loken B., Springmann M., Lang T., Vermeulen S., Garnett T., Tilman D., DeClerck F., Wood A., Jonell M., Clark M., Gordon L.J., Fanzo J., Hawkes C., Zurayk R., Rivera J.A., De Vries W., Sibanda L.M., Afshin A., Chaudhary A., Herrero M., Agustina R., Branca F., Lartey A., Fan S., Crona B., Fox E., Bignet V., Troell M., Lindahl T., Singh S., Cornell S.E., Reddy K.S., Narain S., Nishtar S., Murray C.J.L. 2019. Food in the Anthropocene: the EAT–Lancet Commission on healthy diets from sustainable food systems. Lancet. 393, 447–492.

Xiao Z., Yue L., Wang C. Chen F., Ding Y., Liu Y., Cao X., Chen Z., Rasmann S., Wang Z. 2021. Downregulation of the photosynthetic machinery and carbon storage signaling pathways mediate La_2O_3 nanoparticle toxicity on radish taproot formation. J. Hazard. Mater. 411, 124971.

Xiong Z., Zhang T., Xian Y., Kang Z., Zhang S., Dumat C., Shahid M., Li S. 2021. Foliar uptake, biotransformation, and impact of CuO nanoparticles in *Lactuca sativa* var. ramosa Hort. Environ. Geochem. Health. 43(1), 423-439.

Xu T., Wang Y., Aytac Z., Zuverza-Mena N., Zhao Z., Hu X., Ng K.W., White J.C., Demokritou P. 2022. Enhancing Agrichemical Delivery and Plant Development with Biopolymer-Based Stimuli Responsive Core–Shell Nanostructures. ACS Nano 16, 4, 6034–6048.

Yang J., Jiang F., Ma C., Rui Y., Rui M., Adeel M., Cao W., Xing B. 2018. Alteration of Crop Yield and Quality of Wheat upon Exposure to Silver Nanoparticles in a Life Cycle Study. J. Agric. Food Chem. 66, 2589–2597.

Yin L., Cheng Y., Espinasse B., Colman B.P., Au M., Wiesner M., Rose J., Liu J., Bernhardt E.S. 2011. More than the Ions: The Effects of Silver Nanoparticles on *Lolium multiflorum*. Environ. Sci. Technol. 45, 2360–2367.

Yue L., Chen F., Yu K., Xiao Z., Yu X., Wang Z., Xing B. 2019. Early development of apoplastic barriers and molecular mechanisms in juvenile maize roots in response to La_2O_3 nanoparticles. Sci. Total Environ. 653, 675–683.

Zafar S, Perveen S, Kamran Khan M, Shaheen MR, Hussain R, Sarwar N, Rashid S., Nafees M., Farid G., Alamri S., Shah A.A., Javed T., Irfan M., Siddiqui M.H. 2022. Effect of zinc nanoparticles seed priming and foliar application on the growth and physio-biochemical indices of spinach (*Spinacia oleracea* L.) under salt stress. PLoS ONE, 17(2), e0263194.

Zhong Z., Zhu L., Young S. 2020. Approximation Framework of Embodied Energy of Safety: Insights and Analysis. Energies. 13, 4230.

Zulfiqar F., Navarro M., Ashraf M., Akram N.A., Munné-Bosch S. 2019. Nanofertilizer Use For Sustainable Agriculture: Advantages And Limitations. Plant Science. 289, 110270.

Zuverza-Mena N., Armendariz R., Peralta-Videa J.R., Gardea-Torresdey J.L. 2016. Effects of silver nanoparticles on radish sprouts: Root growth reduction and modifications in the nutritional value. Front. Plant Sci. 7, 1–11.

Zuverza-Mena N., Martínez-Fernandez D., Du W., Hernandez-Viezcas J.A., Bonilla-Bird N., Lopez-Moreno M.L., Komarek M., Peralta-Videa J.R., Gardea-Torresdey J.L. 2017. Exposure of engineered nanomaterials to plants: insights into the physiological and biochemical responses-A review. Plant Physiol. Biochem. 110, 236-264.

Figure captions and Tables

Figure 1. Schematic representation of principal effects emerging after biotransformation of ENMs in soil, on foliar surface and within the plant tissues. ENMs in soil, due to particle and soil physico-chemical interactions, may remain unmodified, or may undergo to potential dissolution (with ions release), or undergo homo-/hetero-aggregation, which may highly influence particle stability and potential bioavailability (and consequently their uptake). On the foliar surface, temperature and light may also affect particle stability before uptake into the leaf tissues. Once within the plant, ENMs pristine, or modified, can interact with several biomolecule types (peptides, sugars, lipids, nucleic acids, secondary metabolites) leading to phenomena such as coating, enzymatic degradation,

chelation or functionalization, which may influence the biotransformed particle at level of translocation, storage or reactivity. These parameters may also influence the interaction within the plant cell, triggering differential responses (*e.g.*, toxicity, oxidative stress, ROS production), which may be indirectly measured by physiological and molecular assays, but directly observed through physical strategies, including synchrotron-based methods.

Figure 2. Principal effects of ENM biotransformation in plant and relevant biomarkers observed in different plant species from model organisms (*A. thaliana*) to crops (*C. pepo*; *S. lycopersicum*; *G. max*) and different tissues (roots, leaves and flowers/pollen). Relevant ENM parameters such as size, stability, dissolution may influence the translocation from roots to shoots. Potential biotransformation mechanisms that may occur within plant tissues are also reported: enzymatic degradation, protein functionalization, functionalization at the level of cytoplasm and organelles (organic acids, thiol-containing compounds, aminoacids, sugars, secondary metabolites). In this scenario, chloroplast become not only a in important actor in the energy production but also one of the key targets and main regulators involved in the ENM exposure and response. Details on the biomarkers generated are reported in Table 1.

Table 1. Genes as potential biomarkers of exposure/effect observed in roots, leaves and pollen, in different plant species (reported in Figure 2). Genes reported cannot be considered only as modulated in the different plant organs by the different type of ENMs, but also they showed a nano-specificity during the ENM response. It is also important to observe how, depending on the ENM type, biotransformation, and as indirect consequence, the transcriptomic response can be convergent between different forms (nano, bulk, ion) of the same element (see Figure 2).

flower & pollen					
plant	**gene**	**function**	**pathway**	**ENM**	**reference**
Cucurbita pepo L.	Cp4.1LG00g07430	Beta-galactosidase	primary metabolism	nCuO	Marmiroli *et al.*, 2021
	Cp4.1LG13g06380	Pectinesterase	primary metabolism		
	Cp4.1LG12g04750	Phosphatidylinositol 3-/4-kinase family protein	primary metabolism		
	Cp4.1LG03g02560	Delta-1-pyrroline-5-carboxylate synthetase	primary metabolism		
	Cp4.1LG02g07240	Leucine-rich repeat family protein	signaling, stress response		
	Cp4.1LG02g12750	Protein EFR3 like	signaling		

leaf					
plant	**gene**	**function**	**pathway**	**ENM**	**reference**
Cucurbita pepo L.	Cp4.1LG01(*)	PSBN, photosystem II reaction center protein N	chloroplast electron transport	nCeO2 nLa2O3 nCuO nZnO CdS QD	Pagano *et al.*, 2016 Pagano *et al.*, 2017
	Cp4.1LG00(*)	PetL, component of Cytochrome b6f	chloroplast electron transport		
Solanum lycopersicum L.	Solyc09g074540	PetL, component of Cytochrome b6f	chloroplast electron transport	nCeO2 nLa2O3 nCuO	Pagano *et al.*, 2016
Glicine max L.	Glyma12g36130	PetL, component of Cytochrome b6f	chloroplast electron transport	CdS QD	Majumdar *et al.*, 2019
Arabidopsi thaliana L.	AtCg00590	PetL, component of Cytochrome b6f	chloroplast electron transport	CdS QD	Marmiroli *et al.*, 2014
	AtCg00270	PSBN, photosystem II reaction center protein N	chloroplast electron transport		

root					
plant	**gene**	**function**	**pathway**	**ENM**	**reference**
Cucurbita pepo L.	Cp4.1LG16g08630	BIP3, Heat shock protein 70 family protein	protein folding, stress response	nCeO2 nLa2O3 nCuO nZnO CdS QD	Pagano *et al.*, 2016 Pagano *et al.*, 2017
	Cp4.1LG00g00090	GPT2, glucose-6-phosphate/phosphate translocator	primary metabolism		
	Cp4.1LG05g08050	RPS12, ribosomal protein S12A	protein synthesis		
	Cp4.1LG05g11200	PLP2, phospholipase	biotic/abiotic stress response		
Solanum lycopersicum L.	Solyc08g006150	ChaC-like family protein	glutathione degradation	nCeO2 nLa2O3 nCuO	Pagano *et al.*, 2016
	Solyc03g081240	PRR5, pseudo-response regulator 5	biotic/abiotic stress response		
	Solyc10g005080	LHY1, Homeodomain-like superfamily protein	stress response		
Glicine max L.	Glyma19g45030	LHY1, Homeodomain-like superfamily protein	stress response	CdS QD	Majumdar *et al.*, 2019
	Glyma15g06800	PR1, pathogenesis-related gene 1	biotic/abiotic stress response		

Table 2. Principal evidence of the ENM biotransformation in plant observed by physiological, molecular and synchrotron-based analyses.

ENM	plant	physiological response	molecular response	techniques	biotransformation	reference
nCeO2	*Cucumis sativus L.*	nCeO2 exposure had no significant effects on the biomass production under both the +P and -P conditions. However, the uptake of Ce in the plants is different under the two conditions	-	TEM XANES NEXAFS	high stability modified redox state, from Ce(IV) to Ce(III) low translocation from roots to shoots	*Rui et al., 2015*
	Lactuca sativa L. *Cucurbita pepo L.* *Zea mays L.* *Glycine max L.*	biomass in the agricultural soil amended with biochar 600°C was largely unaffected	-	SEM μ-XRF μ-XANES		*Servin et al., 2017*
nCeO2 nZnO	*Glycine max L.*	-	-	μ-XRF μ-XANES		*Hernandez-Viezcas et al., 2013*
nCeO2 nLa2O3	*Cucumis sativus L.*	nCeO2 had no phytotoxicity to cucumber at all tested concentrations, while nLa2O3 showed significant inhibition on root elongation, shoot elongation, root biomass, and shoot biomass, as well as induced more reactive oxygen species and cell death in roots	-	μ-XRF XAS	higher dissolution compared to nCeO2 moderate translocation from roots to shoots	*Ma et al., 2014*
nTiO2	*Cucumis sativus L.*	at all concentrations, nTiO2 significantly increased root length (average >300%)	-	μ-XRF μ-XANES	high stability low translocation from roots to shoots	*Servin et al., 2012*
	Cucumis sativus L.	In nTiO2treated plants, the chlorophyll content in leaves increased as the external concentration of NPs increased. nTiO2 treatments increased CAT activity in leaves.	-	μ-XRF μ-XANES FTIR		*Servin et al., 2013*
nAu	*Nicotiana tabacum L.*	leaf necrosis was observed after 14 days ofexposure to 3.5 nm nAu	-	μ-XRF	high stability no changes in Au valence	*Sabo-Attwood et al., 2012*
nAg	*Lolium multiflorum L.*	nAg and ionic silver significantly reduced growth, resulting in shorter shoots and roots and lower biomass. The growth inhibition from nAg was stronger than that from AgNO3. Higher concentrations of AgNPs caused broken epidermis and rootcap. Cell structures were unaltered in AgNO3 treated roots.	-	μ-XRF XANES	low stability high translocation from roots to shoots	*Yin et al., 2011*
	Lactuca sativa L. *Cucurbita pepo L,* *Zea mays L.* *Glycine max L.*	fresh foliar biomass was unchanged. Chlorophyll a, chlorophyll b, carotenoid and pheophytin contents were not affect	-	SEM μ-XRF XANES		*Larue et al., 2013*
	Medicago sativa L.	-	-	TEM XRF		*Stegemeier et al., 2015*
nZVI	*Cucumis sativus L.*	nZVI treatments did not affected the biomass of plants in hydroponic or soil systems. Only nZVI treated plant shoots grown under hydroponic conditions exhibited increased biomass (15%). Chlorosis observed in the leaves of the control plants but not in the plants treated with nZVI	ATPase isoforms increased their expression in the roots of plant exposed to nZVI.	EXAFS	low stability limited translocation from roots to shoots modified particle structure	*Dwivedi et al., 2018*

Table 2 continue in the next page…

ENM	*plant*	physiological response	molecular response	techniques	biotransformation	reference
nZnO	*Zea Mays L.*	-	-	μ-XRF XANES	low stability high translocation from roots to shoots	*Lv et al., 2015*
	Zea Mays L.	By the 7th day, the treatment of 9 nm nZnO and ZnSO4 significantly reduced the dry weight of roots by 44% and 58% respectively, compared to the unexposed control plants. In general, ZnSO4 treatment had the greatest effect on root biomass, followed by 9 nm nZnO and finally 40 nm nZnO	-	μ-XRF		*Lv et al., 2021*
nCuO	*Nicotiana tabacum L.*	When exposed to equivalent weight of Cu, nCu2O exhibited higher toxicity than nCuO, implying that the transformation may elevate the toxicity upon nCuO exposure	-	TEM XANES	low stability high translocation from roots to shoots consistent with an increased ion release modified redox state, from Cu(II) to Cu (I)	*Dai et al., 2019*
	Lactuca sativa L.	Cu exposure had limited impacts on lettuce biomass. For the unweathered exposures, only the root biomass of NP-exposed plants was less than in bulk treatment; no other tissue- specific differences were evident. In the W exposure, the total biomass ranged from 8.2 g (W NP) to 9.5 g (unexposed control); nCuO and ion-treated plant biomass was significantly less than the unexposed controls. With regard to individual tissues in the W exposure, there were no differences of significance in the root biomass.	The expression level of nine genes involved in Cu transport shows that the mechanisms of nCuO and bulk CuO response-accumulation are different from ionic Cu	μ-XRF XANES		*Servin et al., 2017*
	Cucurbita pepo L.	no impact on zucchini biomass, photosynthetic activity or cellular respiration.	RNA-seq analyses on vegetative and reproductive tissues highlighted common and nanoscale-specific components of the response. Mitochondrial and chloroplast functions were uniquely modulated in response to ENM exposure as compared with bulk and salt forms	μ-XRF XANES EXAFS		*Marmiroli et al., 2021*
CdS QD	*Arabidopsis thaliana L.*	treatment with CdS QDs caused a slight stress that increased the biomass in the mutants, but not in the wt, while CdSO4 caused modest phytotoxicity to both the wt and mutants	-	EXAFS	high stability limited ion release high translocation modification in bonds distance	*Marmiroli et al., 2020*